HOVERCRAFT CONSTRUCTION MANUAL

DiscoverHover
www.discoverhover.org

The World Hovercraft Organization's
International School Hovercraft Program

All Material © 2003 World Hovercraft Organization
All Rights Reserved
www.worldhovercraft.org

DiscoverHover One
TABLE OF CONTENTS

Hello Hovercraft Constructor Letter……..……..3
License……....4
General Construction Tips……..5
Parts List…….27
Assembly Structure…….29
Drawings…….32

Hello Hovercraft Constructor:

You have selected a project which will change your life. Building the DiscoverHover One presents opportunities to experience many new ideas and to learn or perfect new skills.

Bob Windt originally designed this machine as an entry level project for students and enthusiasts who belonged to the Hoverclub of America, Inc. After watching how practical and well received this project was, the World Hovecraft Organisation decided to improve the drawings, add teacher training ideas, and make plans available to students and clubs without charge.

The original plans consisted of two blue prints, which lacked much detail, so a project was undertaken to convert the drawings into Auto Cad files and to bring them into line with professional drawing practices. Initially, Tim Envall in Australia and students from Indiana State University in the USA began this work. Rob Wilson, Neoteric Hovercraft's Technical Director who resides in Australia, has finally reworked all of the drawings and made corrections where necessary.

Because the future of world DiscoverHover competitions means craft could need to be shipped all over the world, the machine was redesigned to be knocked-down, making it more stackable so that machines can nest together and shipping volume can be minimized. This is also an advantage when putting the Hovercraft inside a small cargo or passenger van, or a pick-up truck. The concept added more complication to the construction. Now the cockpit, the hull or base, the thrust duct, and the engine module are separable.

Please inform us if you uncover any drawing errors or have suggestions for improvements, and we will promptly revise the drawings and notes as well as list the changes on the DiscoverHover forum. Please note that drawing numbers have interuptions and do not be alarmed when certain numbers are missing. For example there are no drawings 71,72,73,74, and 75. This is not important. Numbers identify parts for which a drawing is unnecessary. Also, the order of the numbers has no significance, and the product code is for use by the World Hovercraft Organization.

The original construction notes have been released along with the drawings. They have had limited editing so take care when using this information. Double check before cutting materials. Inform us of any errors that you discover.

Please document your project, send DiscoverHover your digital photographs, comments and any press articles so everyone can share with you in the world of DiscoverHover and learn heaps about science at the same time.

Good luck with your undertaking and have fun.

Chris Fitzgerald
Chairman
World Hovercraft Organization/DiscoverHover

YOUR PERSONAL "LICENSEE" NUMBER IS .... No. 5335

NOTE:
UNDER THE COPYRIGHT ACT NO PART OF THE DISCOVERHOVER HOVERCRAFT INFORMATION PACK AND THE DISCOVERHOVER HOVERCRAFT CONSTRUCTION PACK MAY BE REPRODUCED OR COPIED IN ANY FORM WHATSOEVER. ONE DISCOVERHOVER HOVERCRAFT CONSTRUCTION PACK GIVES THE PURCHASER OR STUDENT GROUP THE RIGHT TO BUILD ONE AND ONE ONLY DISCOVERHOVER MACHINE. PLANS AND INFORMATION ARE OFFERED AND SOLD SUBJECT TO THE CONDITION THAT THEY AND IT ARE NOT, BY WAY OF TRADE OR OTHERWISE, LENT RE-SOLD OR HIRED OUT.

SHOULD DISCOVER HOVER OR ANY RELATED ORGANIZATION FIND HOVERCRAFT WHICH INCORPORATE PARTS, FEATURES, SHAPE OR DESIGN DETAILS SIMILAR TO THE DISCOVERHOVER DESIGN AND IF THE VEHICLE HAS NOT BEEN BUILT FROM, AND IS NOT SINGLY CONCOMITANT TO, THE PURCHASE OR GIFT OF A DISCOVERHOVER CONTRUCTION PLAN PACK THEN DISCOVER HOVER WILL INSTIGATE LEGAL PROCEEDINGS OR CRAFT WILL NOT BE PERMITTED TO COMPLETE IN SANCTIONED EVENTS.

ADDITIONAL NOTE:
THE PURCHASE OR GIFT OF A DISCOVERHOVER PLAN SET CARRIES LICENSE TO BUILD ONE (1) DISCOVERHOVER HOVERCRAFT TYPE, OF THE SAME SERIAL NUMBER AS THIS PLAN PACK. THIS LICENSE NUMBER SHOULD BE DISPLAYED ON THE VEHICLE. IT SHOULD BE EXPRESSLY UNDERSTOOD THAT ANYONE BUILDING OR HOVERING AN DISCOVERHOVER HOVERCRAFT DOES SO AT HIS/HER OWN RISK AND WITHOUT ANY LIABILITY ON THE PART OF DISCOVER HOVER OR RELATED ENTITIES.

COPYRIGHT 2004. ALL RIGHTS RESERVED. NO DISCOVERHOVER INFORMATION, PHOTO OR DRAWING MAY BE REPRODUCED IN WHOLE OR IN PART WITHOUT THE CONSENT, IN WRITING, OF DISCOVERHOVER OR THE WORLD HOVERCRAFT ORGANIZATION.

GENERAL CONSTRUCTION TIPS DAGEY ROCKS

All joints and seams must be fiberglassed with 2 layers of 6oz [0.2 kg/m^2] fiberglass cloth. Below is a step-by-step description of how to hand-lay fiberglass. The thrust duct is a cylinder made from 1/8" [3 mm] plywood with a foam and fiberglass inlet lip. The topside of the craft should be painted with a light color to prevent heat build up from the sun. This is especially important with the top of the thrust duct.

Step 1) Prepare all surfaces to be bonded by sanding with 40 grit paper. Brush away dust or dirt with a clean rag to remove contaminates.

Step 2) Apply epoxy (check mix ratio) to the fiberglass area by: either a paint roller for larger areas or a brush for small areas. The brush is used to apply a thin coat of epoxy to the surface to be fiberglassed. A natural hair brush is recommended because its bristles are unaffected by the resin.

Step 3) Lay a section of fiberglass mat or cloth just large enough to cover the joint or surface (see fig. 1).

(Fig. 1)

Step4) If the fiberglass shows dry spots, place a thin coat of epoxy over the fiberglass until properly saturated. Glass must be completely saturated for correct bonding.

Step5) If the epoxy is excessive, use a squeegee to saturate the glass and distribute the epoxy uniformly. Remember, the strength and stiffness is from the high glass content not the resin. The epoxy should be just enough to saturate the fiberglass. Too much epoxy just adds useless weight.

Step6) For proper fiberglass curing allow 24 hours at 70°F [20° C].

HULL CONSTRUCTION

Foam and plywood hovercraft have many advantages. They float no matter how badly damaged. Bilge pumps and drain plugs are not needed. The craft can be parked on rocks without concern of puncturing the bottom. A foam hull is simpler to build because you don't have to build ribs and stringers. It is also easier to keep clean of grass, leaves, dirt and sand.
Purchase foam and 1/8" [3 mm] plywood skin first. The plywood should be exterior or marine grade. If 1/8" [3 mm] plywood is not available try for 5/32" [3 or 4 mm]. Use extruded Styrofoam only. This foam is available from most lumber or timber yards in 4' x 8' x 2" [1219 x 2438 x 50 mm] sheets. Some foam factories will have 3 inch [76 mm] available. Foam should have a density of 1.8 - 2.2 lb. [27 kg/ m^3] per cubic foot density. Other foam that works well is 2 lb. per cubic foot [30 kg/m^3] urethane. This foam is not affected by gasoline or polyester resin. Some builders have used white bead foam in 1 -2 lb [27 kg/m^3] density, but this foam is weak, cracks easily and absorbs water. Choose foam with a flat surface and smooth edges to make gluing and laminating easier. Lay up the pieces so the butt joints do not occur in the same place on different layers on the length and width. Glue about 18-24" [530 mm] of 40 grit sand paper to a flat board 3" [70 mm] wide to sand foam edges flat for gluing. Use only epoxy glue on Styrofoam. Fit pieces to make the hull about an inch [25 mm] larger than shown on the plans.

Procedures:

1) Cut 1/8" [3 mm] plywood sheet as shown in drawing 1, 2 and 3, 23, 28 and 29. Cut ¼" (6mm) plywood parts shown in drawing 23 & 24.
2) Cut the foam as shown in drawing 9, 10, 11, 14, 34 and 35.
3) Find a flat surface and join parts 1, 2 & 3 with light fibreglass cloth strips. Use a plastic sheet under joints to keep the resin off the flat surface.
4) Epoxy glue foam parts 9, 10, 34 & 35 to 1/8" (3mm) plywood parts 1, 2, & 3. Good bonding is necessary for adequate strength – epoxy all surfaces to be joined. Use 20 - 50 lb [23 kg] sand/dirt bags or buckets of water to hold assembly down flat while glue sets.
5) Once the epoxy has set, place 11 (both sides) and 14 (front) on the foam side and glue down with epoxy adding uniform pressure (see Figure 2).
6) Next, place 23 x 2 (front and back), 24 x 2 on the sides and apply pressure to bond with epoxy. Masking tape can be used to keep the skirt attachment strips from falling.
7) At the same time 28 and 29 should be placed and glued to the hull, again applying pressure for good bonding.
8) After the glue has set measure 11 inches [279 mm] from the outside edge with a L- square (framing square) to find where the outside edge of 30, 31 and 32 (skirt attachment strips) are to be glued.
9) Finally screw the Landing Skids 53 to the hull on 31, positioned 18" (457mm) and 96" (2438mm) from the aft end of the hull.

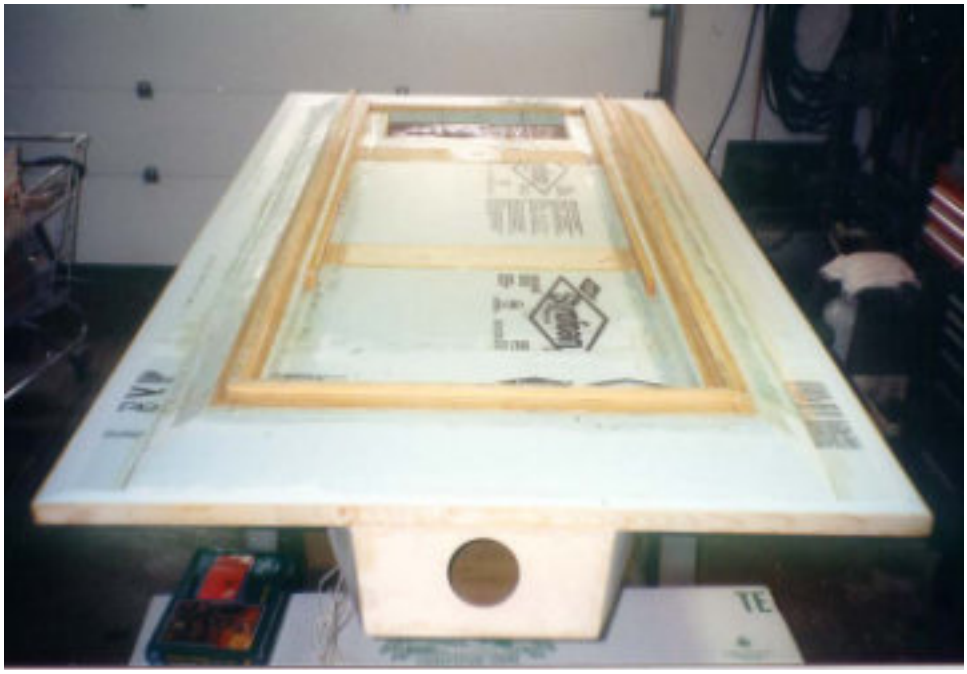

(Fig. 2)

Body Subassembly

For this craft the body has been designed to be detachable for easy transportation.

Procedures:

1) Cut 1/8" [3 mm] plywood as shown in drawings 4, 5, 22 & 27.
2) Cut ¼" (6mm) plywood part as shown in drawing 65.
3) Make wood parts as shown in drawing 6, 15, 17, 20, 21 & 25.
4) Make aluminum part shown in drawing 60.
5) Glue and nail two 15s to 65 leaving 1.5" [38 mm] space from the edge and following the shape of 65 (Base).
6) Place 6 (Engine Post) in the square notch on 65 (Body Base).
7) Align 4' (Cockpit Side) with 6 and glue & nail them to 15's (Stringer Bottom) which are already in place on 65.
8) Glue and nail two 20s to 4s leaving a 1/8" [3 mm] space from the top and following the shape of 5 to fit top correctly.
9) Place 60 and glue with epoxy applying pressure with clamps. Let it set over night.
10) Place 17, glue and nail together to reinforce the structure of the body.
11) Glue and nail 5 (Cockpit Top) and 27 (Front Infill) to close body.
12) Glue and nail 25 x 2 to the inner walls of the body and place 22.

ENGINE MOUNT

1) Place the body subassembly on the hull and secure it with bolts through the craft and washers and nuts on the bottom side.
2) Cut 1/4" [6 mm] plywood part as shown in drawing 16. Cut and laminate 5/8" [16 mm] thick plywood part as shown in drawing 33.
3) Place 33 (Engine Mount) on 6 (Engine Post) and secure with 7 & 8 (Bracket Right & Bracket Left).

4) Glue and screw through the 5/8" [16 mm] engine base into the cockpit stringers with 1 1/8" [29 mm] drywall screws. The engine mount gets most of its strength from the 1/8" [3 mm] plywood cockpit side covering. Use good workmanship for strong fits to obtain maximum bonding contact area.
5) Next place the fins to the engine mount for additional strength (See Fig. 3). Use the previously cut wedges 21 between the engine base and the fins to obtain an appropriate angle and support against the base (see figure 5). Glue each block to the inside lower edge of each fin. Place a layer of thin plastic or polyethylene on the deck. Position the fin and apply about 5 layers of fiberglass and epoxy to the lower edge of the fin. When dry trim to a neat shape and drill two ¼" [6 mm] diameter holes through the fiberglass and the hull. Remove the fins and enlarge the hoes to 1" [25 mm] diameter in the hull. Bond two wooden dowel pins in the holes flush to the top of the deck by using epoxy. Glass the flush surfaces on the top and bottom. Reinstall the fins and using the holes in the fin fiberglass drill two ¼" [6 mm] diameter holes through the dowel pins. Fit appropriate bolts using large fender washers at least 1 ¼" [31 mm] diameter and lock nuts. Apply 5 layers of fiberglass on the edges connecting the fins with the engine bas (See Fig. 3). Also create a slit in the thrust duct so that the fins run through the duct (see figure 4). Apply 5 layers of 6 oz [0.2 kg/m^2] fiberglass for a strong joint.

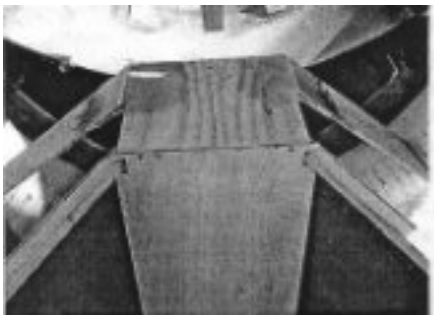
(Fig. 3)

(Fig. 4)

(Fig. 5)

THRUST DUCT

Good workmanship on the duct will pay off not only in appearance but also in increased performance. The shape of the inlet lip and the close clearance between the prop tip and the duct wall are most important in achieving the best performance.

Procedures:

1) Start by making the 1/8" [3 mm] plywood duct inside wall. Cut 3 ply pieces across the grain (for easier bending) 13" x 18 ¾" [330 x 476 mm] (see figure 6).
2) Put the pieces together, on a smooth surface, by using 2 layers of fiberglass on each side of each joint to get a piece 13" x 114 ¾" [330 x 2915 mm].
3) Now cut 2 discs 36 ¼" [914 mm] in diameter from ½" or ¾" [13 or 19 mm] plywood (see figure 6). (a nail in the center and a wire as a compass is preferred radius scribe) The discs are held about 3 ½" inches [89 mm] apart by screwing 6 small pieces of wood 2" x 4" [51 x 102 mm] between them. Use a square to be sure the disks are lined up with each other and drill a 1" [25 mm] diameter hole thru the center of each disk
4) Now sand a taper on leading edge of the 114 ¾" [330 x 2915 mm] plywood. This will be the start of the inlet lip radius.
5) Wrap the 1/8" [3 mm] plywood around the disks so the taper is to the inside. Pull the plywood down tight against the disks by using a nylon rope or ratcheting tie down strap.
6) Nail the ends of the 1/8" [3 mm] plywood to the disks with small ¾" [19 mm] nails.
7) Mount this assembly to a bench or table by inserting a piece of ¾" [19 mm] steel conduit, 48" [1219 mm] long, thru the center of the disks so the assembly can be easily rotated (see figure 6).

(Fig. 6)

8) Make the Styrofoam part of the duct by cutting the inner & outer radius shown on drawing 39 (See Fig 7). When making the radius, mark a line at each end for cutting off excess foam. The second piece may be traced from the first.
10) Glue the 2 pieces of foam together and trim to the lengths shown on drawing 39.

(Fig. 7)

11) Fiberglass one side of the foam except the last ½" [13 mm] nearest the 131" [3327 mm] length. This will make it easy to sand the small outside radius later. Use 2 layers of 2 oz/yd [0.1 kg/m^2] cloth or 1 layer of 4 - 6 oz/yd [0.2 kg/m^2] fiberglass cloth. The 4 - 6 oz [0.2 – 0.3 kg/m^2] cloth is easier to work with and it's easier to avoid bubbles and wrinkles. You may use a round metal resin roller to remove air bubbles and to press the glass in place. Vacuum bagging may be used here to give a smooth finish with minimum weight of resin.

12) Shape the foam by cutting the taper on the 13" [330 mm] of the trailing edge, as shown in the thrust duct cross section 39. This cut can be made with a band saw, a hand saw or a hot wire cutter. After cutting, sand to shape shown and sand the inlet lip radius. Now make saw cuts into the foam to a depth of ¼" to ½" [6 to 13 mm] above the fiberglassed surface (or 1 ½" to 1 ¾" [38 to 44 mm] deep).
13) Make the cuts every inch [25 mm] along the full length of the foam and every ½" [13 mm] for the last 4" [102 mm] at each end (see figure 8). These cuts will permit the foam to bend easily around the disks with the 1/8" [3 mm] plywood ring. Bend so fiberglass is to the outside. Bend without gluing first to check fit.

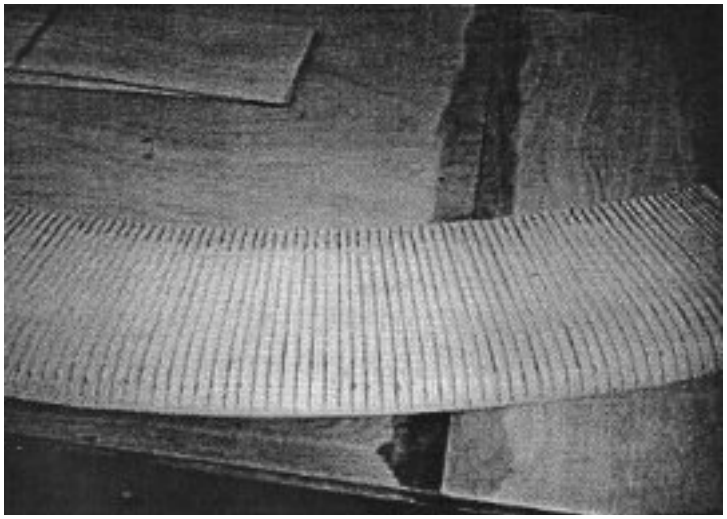

(Fig. 8)

14) Now roll epoxy on the foam and the plywood disc. Then rap the foam around the disc and tighten with 2 or more nylon straps or 2 or more ratcheting tie down straps (see figure 10). Be sure the trailing edge of the foam and plywood line up. The ends of the foam should be about 1" [25 mm] short of coming together. This will be the bottom of the duct and will be filled with foam sealant when the duct is mounted to the hull. Next finish sanding the inlet radius and fiberglass with small pieces (9" x 9" [229 x 229 mm]) of fiberglass, overlapping each piece. Some car or auto body filler may be used over the fiberglass to make a smooth surface. The outside surface of the duct must be painted a light color to protect the epoxy from the harmful effects of sunlight. Very dark colors may absorb so much heat from the sun to melt foam on sunny days.

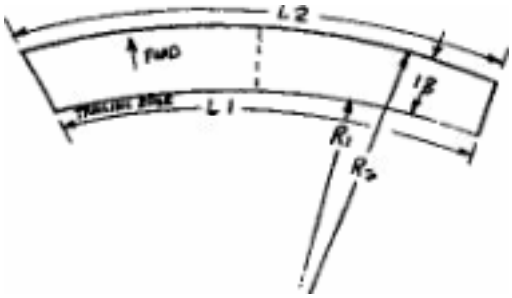

(Fig. 9)

For 36 ¼" [921 mm] inside diameter ducts:
L2= 132" [3353 mm] L1= 114 5/8" [2911 mm]

R2= 130 ¼" [3308 mm] R1= 112 ¼" [2851 mm]

(Fig. 10)

AIR BOX

The air box has also been designed to be detachable for transportation.
Procedures:

1) Cut 1/8" [3.175 mm] sheet of plywood as shown in drawing 63, 36, 26, 38, and 37.
2) Using small blocks of wood, nail and glue two 38's (Airbox Side) to 36 (Airbox Back).
3) Drill 1/32" (0.8mm) holes every 6" (152mm) along the upper & lower edges of 36 & 38, the inner edges of 63 (Duct Base) and back edge of 37 (Airbox Top).
4) Tie part 63 to the assembly of 36 & 38's with wire. Fibreglass the joints.
5) Center & square the air box in position on the deck and mark its position.
6) Cut the bottom of the thrust duct so it sits flat on the hull with the 1/8" (3mm) plywood inner surface about 1" (25mm) above the deck (see figure 12 & 13). Now cut a section out of the duct on the trailing edge to a width of 9" (228mm) and a height of 9" (228mm) above the deck (see figure 11).
7) Position the thrust duct on the air box and fiberglass in place. Wire 26's (Airbox Infill) to 63 and fiberglass to thrust duct.

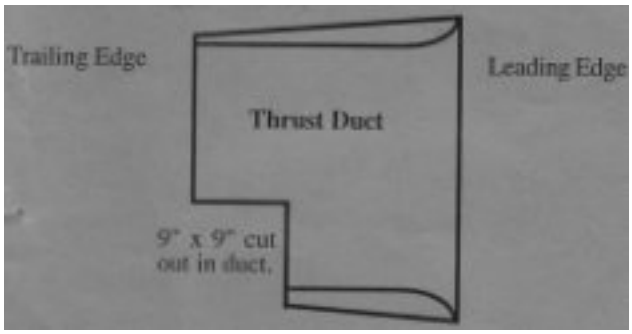

(Fig. 11)

8) Wire 37 (Airbox Top) to 36 and fiberglass all joints to form the air splitter which divides the lift and thrust air (see figure 12 & 13).
9) Fibreglass the upper & lower rudder mounts in place as shown. These may be drilled ¾" (19mm) after installing to align upper & lower holes. Paint all wood surfaces with good quality polyurethane, epoxy or other exterior paint.

(Fig. 12)

(Fig. 13)

ENGINE MOUNTING INSTRUCTIONS

The engine is bolted to the 9" x 9" x 5/8" [229 x 229 x 16 mm] engine base
Procedures:

1) Place body subassembly on the hull and attach firmly with 3" [76 mm] #8-32 [M4 x 0.07] bolts, plywood washers, fender washers, and lock nuts or equivalent metric bolts.
2) Place the air box subassembly and attach firmly with 3" [76 mm] #8-32 [M4 x 0.07] bolts, plywood washers, fender washers, and lock nuts or equivalent metric bolts.
3) Align the engine shaft with the 1" [25.4 mm] hole in the duct forming discs. Washers or pieces of aluminum sheet for shims may be used to obtain appropriate height.
4) Use a transfer punch or a pencil to transfer the bolt pattern from the engine base to 33. For accuracy, pre-drill bolt holes with a 1/8" [3 mm] twist drill.
5) Drill clearance holes 11/32" [9 mm] through 33.
6) Bolt engine using 5/16" [8.93 mm] bolts, washers, and nuts or equivalent metric bolt. The length of the bolts will vary depending on the engine used. Large washers should be used on the bottom to distribute the load and to prevent the bolts from sinking into the wood (See Figure 13a).
7) Remove the wooden discs from the thrust duct.
8) Install the 4.5" [114.3 mm] aluminum hub to the engine shaft. Refer to the Propeller Hub Mounting Instructions section on page 18 of this manual. Allow approximately 1" [25.4 mm] of shaft extension to protrude into the wooden propeller.

(Fig 13a)

PROPELLERS

Choosing the correct propeller for a Hovercraft is important. A wrong choice can result in very poor performance. To get best performance from a given engine the propeller must let the engine turn fast enough to develop maximum horsepower, but not so high that it will exceed the maximum engine rpm when at full speed. Note the maximum propeller rpm at full throttle will increase as craft forward speed increases, usually about 100 rpm per 20 mph [32.2 km/h] speed increases 5 rpm per mile per hour [8 km/h].
Choosing the correct propeller pitch is just as important as the correct engine rpm, so as to develop maximum thrust. A large propeller will always develop more thrust than a smaller diameter propeller. For example, a 2 foot [610 mm] diameter propeller will develop about 45 pounds [20.25 kg] of thrust at 10 horsepower [7.5 kw] while a 4 foot [1219 mm] diameter propeller will develop about 75 pounds [33.75 kg] of thrust. The number of blades or the width of the blades makes little or no difference in thrust for practical purposes. Therefore use the largest 2 blade propeller you possibly can to get best performance; but very large propellers need large and heavy guards, mounts, ducts, and very high reduction drive ratios for proper engine rpm. Larger propellers also cause more nose down pitching on a Hovercraft, so there must be a compromise on propeller size. Your propeller size is limited by the duct design and engine transmission. On the mower type engines a belt drive system is usually not worth the extra effort and weight because propellers can be made to match the engine speed close enough.

Instructions for finishing the pre-shaped Propeller

Required Materials

Sandpaper
Electric/Pneumatic Power Sander
Wood Filler/Bondo/Epoxy Filler (if applicable)
Epoxy Resin
3 - 6 oz. [0.2 kg/m^2] Fiberglass Cloth
Home-made propeller/fan balancer
Drill Press Center Punch Prop/fan hub w/ bushing
Knife

The Finishing Process

There are five main steps to finishing a propeller or fan. They are:
1. Surface preparation/sanding
2. Drilling the center bore hole
3. Drilling the propeller bolt holes
4. Fiberglassing & balancing
5. Finish sanding/check balance

Step 1- Surface preparation/sanding

After shaping the propeller, if any dents or gouges exist, fill them with wood putty, automotive body filler, or epoxy filler. Sand blades smooth. The leading edge should be sanded round, and the trailing edge should be sanded to a sharp point (see figure 14).

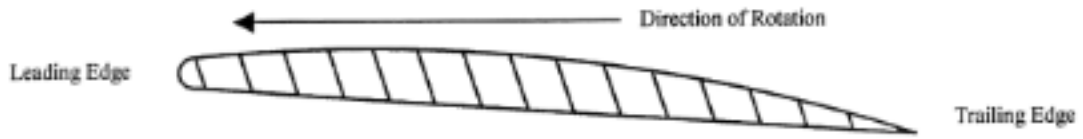

Blade cross-section. Note- the smooth radius on the leading edge and the sharper point on the trailing edge.

(Fig. 14)

Step 2 - Drilling the center bore hole

Start with an l/8" [3 mm] or 5/32" [4 mm] pilot hole drilled in the center. Use a drill press and drill a hole that is the same size as the bolt that will allow a bolt to fit the engine shaft.

Step 3 - Drilling the propeller bolt holes

Before drilling the bolt mounting holes, it is important to make sure that the holes will be centered with the center bore hole. Tighten the bushing and prop hub onto the correct diameter shaft and then slide the propeller onto the same shaft (see figure 15). Mark the correct location of the mounting holes using a transfer punch. Once all holes have been located and marked proceed to drill the bolt holes using a drill press and a 3/8" [10 mm] twist drill.

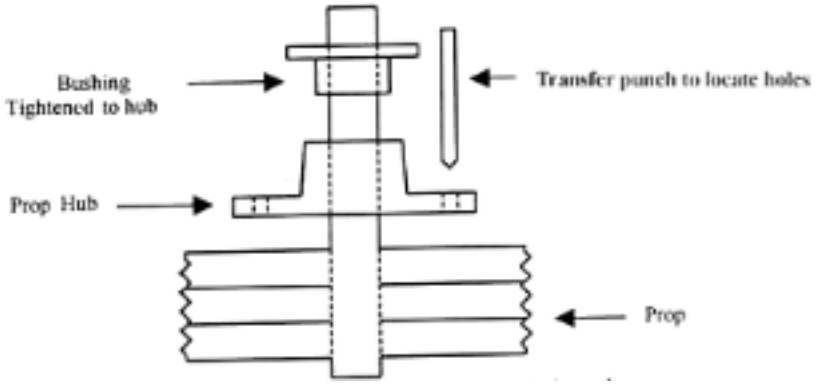

Proper aligning to mark bolt hole location.

(Fig. 15)

Step 4 – Fiberglassing & balancing

Balance the prop during the surface finishing process. This will enable getting close to being balanced while still be able to add extra material. Once dry, trim off the excess, and finish sand. Then check for balance.

The first step is to make a good prop balancer (see figure 16). This balancer can be homemade inexpensively. It is essentially two pieces of angle iron with one edge on each sharpened to a razor edge. These pieces of angle iron are spaced about 5 inches [127 mm] apart and should be mounted to a pair of

sawhorses. Run a shaft through the center bore hole of the prop and rest the axle on the edges. The heavier blade should rotate down due to gravitational attraction.

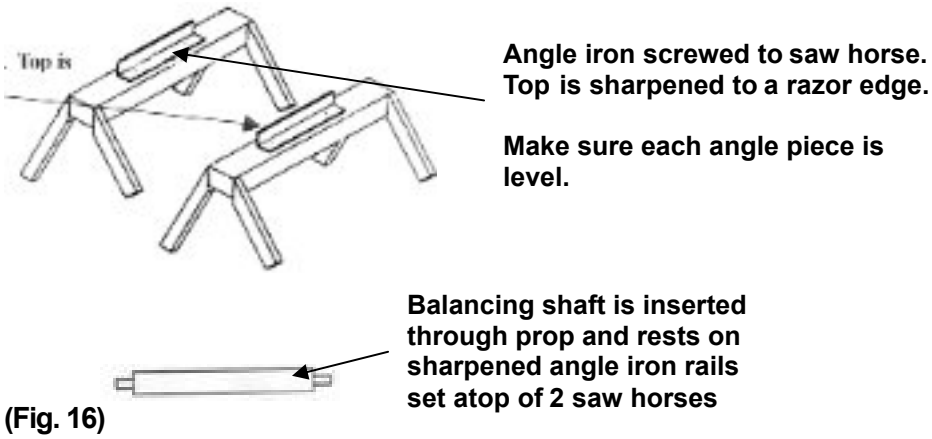

(Fig. 16)

The propeller should be balanced statically. If you have access to a dynamic balancing machine and an experienced person get the propeller dynamically balanced. For approximate balance, position the propeller blades horizontally. Release and observe which blade falls. Add extra fiberglass to the lighter side to balance the weight until the propeller remains in a horizontal position after releasing. This statically balances the prop, but does not account for dynamic balancing.

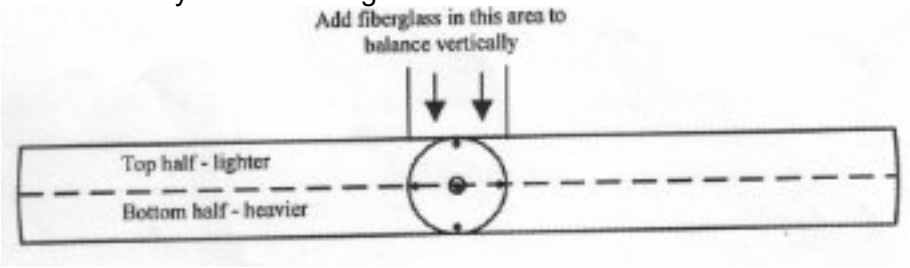

Insert through prop and rest on angle iron knife edge so the prop is between the two sawhorses.

(Fig. 17)

Recommended amount of fiberglass

When fiberglassing the propeller, cover the entire blade surface with two layers of a 3-6 oz [0.2 kg/m^2] fiberglass cloth. Then add additional 2 or 3 layers to the leading edge to help prevent tip erosion. Do not fiberglass in the area of the bolt. Coat these areas with epoxy to seal the wood from moisture.

Step 5 - Finish sanding

After curing, trim all excess fiberglass not covering the surface of your prop with a razor knife. Using a power sander, (or 220 grit sandpaper), sand the prop smooth. Recheck for balance after finish sanding is complete. Prop can be unpainted for a natural look or painted any color.

Warning - breathing fiberglass dust might be hazardous to your health. Take precautions to avoid breathing fiberglass dust and getting fiberglass dust on your skin. Some people will develop itchy skin and some are affected by a reaction to epoxy glue. Wear gloves and a carbon filter mask if you are allergic to epoxy.

Propeller Maintenance

A prop can last a long time when maintained properly. It is natural for hovercraft propellers to become worn over time because they are constantly operating in water spray and dust. Dents and gashes up to l/8 the width of the blade can be filled with epoxy filler or car body filler and fiber glassed to restore the prop to safe operating condition. When a hovercraft is not being used, rotate the propeller horizontally with the ground. This prevents moisture in the wood from running to one side causing it to be out of balance. Check that prop bolts are properly torqued before operation. 3/8" [10 mm] diameter bolts or metric equivalent on a prop hub 46 hub torqued to 16-18 foot-pounds [22 Nm]. Do not torque bolts to where the wood is compressed. Propeller backing plates made of aluminum should be used to prevent this problem.

RUDDERS& TRIMING

The purpose of rudders is for steering the hovercraft and for maintaining directional stability; in other words to keep the craft pointing into the wind when the rudders are straight. Directional stability is important especially at high speeds. Insufficient rudder area or if one or more rudders should fall off at speed the craft could turn sideways or backwards with a possibility of overturning. Also during a high speed plow-in, having a lot of rudder area is important so as to maintain some control. Rudders should turn at least 60 degrees in each direction for good low speed steering. All rudders should have a symmetrical airfoil shape. That is a small leading edge radius tapering up to a maximum thickness of 1/3 of the cord. The pivot point on a rudder should be 20 to 22% of the cord measured from the leading edge. If the pivot is too far forward the rudder will be difficult to turn especially to large angles. If the pivot point is further aft the rudder will be difficult to hold straight especially at high speeds and possibly dangerous.

CONTROLS

Rudders

1) Shape two 15" x 24" x 1" [38 x 610 x 51 mm] foam pieces into an airfoil shape as shown in the full size rudder cross section drawing 43. Rudder can be shaped by using a hotwire, belt sander, or foam hand plane.
2) Sand rudder airfoil shape smooth. The leading edge should have a nice round radius, and the trailing edge should taper to a rounded point. (see figure 18).
3) Fiberglass the rudder surface with one layer of 3.25 oz [0.1 kg/ m^2] fiberglass. Lay wax paper on a work area. This will allow fiberglassing on one side then flip it over and fiberglass the other side. Once the epoxy glue has dried, peel the wax paper off.
4) Wrap a single piece of fiberglass around the entire rudder to eliminate joints in the fiberglass which have to be sanded smooth. The top and bottom edge of the rudder need not be fiberglassed. Simply coat the foam with epoxy resin to seal out moisture.
5) Using a piece of ¾" [19 mm] conduit, drill a 3" [76 mm] deep hole on each end of the rudder.
6) Shape the pieces of wood to make the rudder arms as shown in drawing 41.
7) Sand a small radius on the square corners of the bottom side of the rudder arms. This makes wrapping glass over the wood surface easier. When fiberglassing rudder arms to the rudder foam fiberglass over square corners.
8) Use epoxy resin to glue the rudder arms to the bottom of the rudders making sure to line up the holes drilled in the foam and the rudder arms. Apply epoxy glue to both surfaces being glued. Fiberglass the rudder arms to the rudder foam using (2) layers of 3.25 oz [0.1 kg/ m^2] fiberglass cloth. Fiberglass should cover at least 1" [25 mm] of the bottom foam on one side of the rudder.

Wrap glass around the wooden rudder arm, and overlap at least another 1" [25 mm] of the foam on the other side.

9) Use epoxy resin to glue the ¾" x 5" [19 x 127 mm] dowel rods in the top and bottom holes of the rudders to create the rudder pivots. Apply glue to both surfaces being glued together. This may require a small bit of epoxy being poured down the holes in the foam to ensure enough is used to saturate the dowel. Using a square ensure that the dowel rods are aligned to the rudder. A crooked pivot point will not allow smooth rudder operation. Fiberglass the upper and lower wooden pivots to the foam Rudders should look like examples in Figure 18.

(Fig. 18)

Finished rudders ready for painting.

Controls

1) Make the wooden parts as shown in drawing 18 and 19.
2) Use epoxy to glue upper- rudder supports, 12" [305 mm] apart, to the inside of the duct at the top. The hole is perpendicular to the deck of the hull. Add shims when gluing. Use (2) small wood screws per piece, which are used to hold the support to the duct while the epoxy glue dries. Remove the screws after the epoxy has hardened.
3) Fiberglass supports to the inside of the thrust duct using (2) layers of 3.25 oz [0.1 kg/ m^2] fiberglass cloth. Note: a crooked hole will not allow the rudders to pivot smoothly.
4) Using epoxy, glue the lower rudder supports to the top of the air box using same technique as explained above.
5) The lower rudder supports should line up with the upper rudder supports so that rudders are perpendicular to the hull deck.
6) Fiberglass the lower rudder supports to the air box top.
7) Make the rudder connecting bar as shown in drawing 40
8) Make sure the rudders are exactly parallel. Then connect part 40 to the underside of the rudder ends, using a ¼"-20 x 1½" [M6 x 1 x 38 mm] carriage or hex bolt or metric equivalents. Drill a ¼" [6 mm] hole in the bottom of the rudder

The Steering Stick

I. Construct the steering stick as shown in the steering sub-assembly drawing 56. The steering stick connects to 57 with a hinge (See Figure 19). It is recommended that the hinge be fastened to a piece of 5/8 [16 mm] thick wooden block that is first glued and fiberglassed to cockpit floor. This will ensure screws for the hinge do not penetrate the hull.

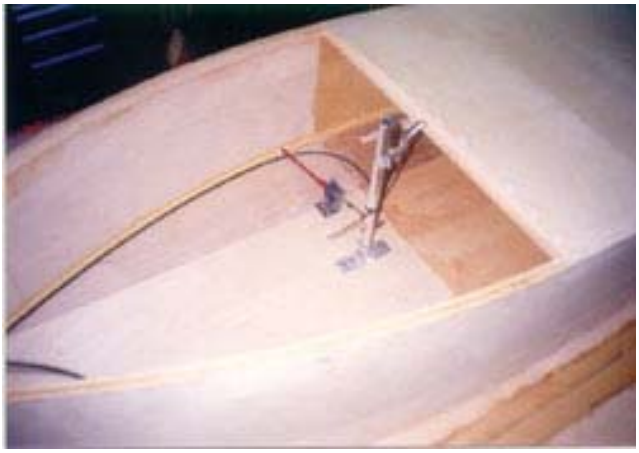

(Fig. 19) The steering stick should be mounted to 57

Connecting the Steering Stick to the rudders

The rudders and steering stick are connected with 1/16" [1.6 mm] stainless steel aircraft cable that is routed through four deck mounted pulleys as per drawing 98. Locations for the steering block and steering pulleys are shown in drawing 70.

1) Drill a ¼" [6.35 m] hole through the cockpit sidewalls to allow cable passage.
2) Manufacture steering joy stick to drawing 13.
3) Loop the cable and slide down the steering stick and under the washers. Do not tighten the nut until final adjustment of the rudders.
4) Criss-cross steering cables at the back so the right side cable attaches to the left side of the rudder connecting bar and the left side cable attaches to the right side of the rudder connecting bar.
5) Use ¼" [6.35 mm] copper tubing or 1/16" [1.6 mm] cable crimps (also called nicropress sleeve) to fasten steering cable to the rudder connecting bar.

Installing the Throttle

1) Place the steering as per drawing 70.
2) The throttle handle can be made using a piece of 3¼" x 6" x 1/16" [83 x 152 x 1.6 mm] aluminum or equivalent. A bicycle break lever may be substituted as a throttle lever.

The throttle cable

1) Attach one end of the throttle cable to the throttle lever. Attachment may vary depending on the type of throttle lever used. If a bicycle break lever is used the proper connectors can be purchased at a bicycle shop. Connect level by drilling a hole in the lever and looping the inner cable through the hole and securing with ¼" [6 mm] copper tubing or 1/16" [1.6 mm] cable crimps.
2) Use a hose clamp to hold the throttle casing against the steering stick (joystick) to prevent cable slippage. Note: Over tightened clamp may make the throttle difficult to operate.
3) Attach the other end of the throttle cable directly to the throttle lever on the engine carburetor.
4) The engine governor must be removed. The propeller is now the engine governor. A bracket may need to be fabricated to hold the throttle cable in position depending on the engine used.
5) Connect a small spring to the throttle valve on the carburetor to return the throttle to close when the throttle is released.

GUARDS

A propeller guard is the most important safety item on the craft. Make the guard by following drawing 44. Next pre-drill 1/8 inch [3 mm] holes in the centersof the ¾ inch [19 mm] piecesof wood that are evenly spacedaround the outside of the thrust duct. Insert eye screwsinto theseholes. Center the guard on the duct and usesafety wire through the eye screwsto attach the guard.

HOVERCRAFT SKIRTS

The skirt is the most important part of the hovercraft. A well constructedskirt will produce a well functioning craft. There have been many different types of skirts usedon hovercraft. Of all these, the bag skirt has many advantages.Bag skirts give a very stable ride especially at high speedsand in rough weather. Bag skirts are madefrom either a neopreneor vinyl coatednylon with a weight between 12 to 21 oz. per squareyard [0.4-0.7kg/m^2]. The most commonly usedmaterial is the Vinyl coatednylon with a weight of 18 oz. per squareyard [0.6kg/m^2]. This material is very wear resistant and remains flexible at low temperatures. It can be glued and repaired easily. Skirt material and glue can be purchasedfrom a tent and awning supplier.

The skirt is madefrom 30 inch [762 mm] wide material. Find material 60 inches [1524 mm] wide and cut in half. Measureall inner and outer skirt attach strips on the craft and cut the skirt material 1 inch longer on eachto allow material for gluing and sewing. Make the skirt to fit the actual size of the craft. Therefore the hull must be completed before attempting to make the skirt.

The length of the front skirt is 2" [51 mm] longer than the front attachmentstrip's actual size. This provides for the front skirt to lap over the side skirts by one inch [25 mm] on eachside. Also, the sameis true for the sides except, they will only be 1 inch [25 mm] longer than the side attachmentstrip's actual size to lap over the rear skirt by 1 inch [25 mm]. The rear skirt will be the samelength as the attachment strip's actual size.

Make a template of the S shapecorner found in drawing 64. Use a piece of Flat cardboard or a scrap piece of plywood. Check the material to seeif one side has more coating than the other and put that side to the outside. Cut one end of eachof the pieces. Again check that the side of the material with a thicker coating is going to the outside of the craft.

The bestglue for skirt work is HH-66 Vinyl glue or instant glue. Contact cement, exceptlatex types, will work if you follow label instructions. Other types of glue including urethanebond and epoxy will work but require overnight clamping. For Neoprene skirt material useHarod 628 Neoprene adhesive.

Skirt Joints

Glue 1" [25 mm] of material at eachcorner joint so glued sectionswill come together as shown in figure 20. To make a wear resistant joint overlap one inch of material and bond with adhesive. For Neoprene use Harrad 628. Place the edge of the bendedmaterial away from the normal direction of travel. Mark the material with the 1inch (25 mm) lap width to assist assemblyalignment. **Overlaps shouldface the rear of the craft.** Make a complete corner from paperfor practice and to insure proper fit before cutting expensive skirt material. Many material bonding adhesivesare of the contact type. After coating the area to be bondedallow 5-10 minutes for evaporative drying. When bond surface is tacky to the touch press seamtogether and squeeze. Use a hammer headto rub along the seamand force into full contact. Once contact is madethe joint cannot be moved or remadewithout beginning the processall over. Avoid

wrinkles at all cost because they increase skirt resistance and encourage excessive wear. Each seam can be sewn using a commercial machine such as used by an upholsterer.

All thread should be coated with a light coat of urethane glue on the inside and outside to prevent wearing and unraveling. Note that urethane glue expands when drying and if it is too thick it will peel off. Other glues can also be used for coating but urethane is best. It can be found at many hardware and department stores. If excess wear is found at some area of the skirt, urethane glue can be spread over that area.
For extended operation over concrete, asphalt, gravel or ice a wear strip can be stitched to the bottom of the skirt at the contact line (see figure 21). The contact line is 1 inch [25 mm] in (toward craft center) from the center of the skirt material (16" [406 mm] from outside on 30" [762 mm] wide skirt. Make the wear strip from a 1½" [38 mm] strip with a narrow strip of glue down the center to hold while stitching. Run one row of heavy nylon stitching down the center of the 1½" [38 mm] strip. Then fold the outside flap toward the center of the craft and stitch it down as shown so this flap is about 1/4 inch [6.35mm] shorter than the lower piece. Again coat all thread with a thin coat of urethane glue.

(Fig. 20)

(Fig. 21) [25.4]

Installing the Skirt

Place the craft on a low bench and screw the 4 corners inside first. Then adjust the skirt to the best position for least wrinkling and even hanging. By adjusting the skirt, try to get the contact line to be in the same height plane. What happens to the rest of the skirt is not important. Just the contact line is important in achieving good performance. Use 1/2 x #6 [M3.5 x .0613 x 13 mm] round Phillips head sheet metal screws every 4" to 6" [102 to 152 mm] for skirt attachment.

It is best to check skirt adjustment with the craft hovering on hard level ground. Inspect for wrinkles and high or low areas, especially at the corners. Adjust by taking in or letting out material at the skirt attach strip or by moving the tack line either way. In extreme cases you may have to redo a corner to take up more material. But the extra 5 to 15 mph [3.1 to 9.3 km/h] in speed is worth the effort.
The aft part of the skirt gets most wear and tear. Take care when attaching the skirt especially across the aft inside attach strip. The skirt attachment should be checked after high speed operation on rough water. Rough water imposes high pulling forces on the skirt and on attachment strips. Loose attach strips or screws can result in large tears in the skirt by permitting the skirt to scoop water. Properly placed skirt attachment strips, good driving techniques and a properly balanced craft will minimize skirt repair.

One way to attach a skirt correctly the first time is to mark perpendicular chalk lines on the skirt every three feet (meter) on each side. Then mark the corresponding lines on the hull perpendicular to the outer skirt attach strip, or tangent line at that point, marking the outer and inner skirt attach strip. Attach the inside skirt at these points and adjust the excess material evenly between these points. It is easiest to do this with the bottom of the craft upside down.

The skirt should be checked and repaired before each outing. One loose screw can cause others to come loose until the skirt no longer functions properly. A small tear quickly gets large enough to impair performance.

When a hovercraft is shut off on water the bag skirt will slowly fill because the skirt tends to sink. A good skirt drainage system is necessary to drain the skirt when the craft begins to take off. Two slits 3" to 4" [76 x 102 mm] long starting behind and above the contact line, cut in the rear of the rear bag. When the skirt is full of water use just enough power for a stable hover. Move forward at a slow pace until the skirt completely drains. Use of more power can cause excessive spray and propeller blade erosion as well as more noise and possible skirt damage. When on land, with the engine is off, lift the front of the craft to drain the skirt.

If the front skirt wants to tuck back easily when the craft is at cruising speed, check for loss of skirt air at the tack strips. Sometimes you may have to use fiberglass to seal and help hold these tack strips to the hull. Check for holes or tears in the skirt. The bag air feed opening is about 3" to 4" [76 x 102 mm] to insure enough air is fed to the skirt. Note: Prop tip clearance should always be as small as possible (slight rubbing contact is acceptable.)

SKIRT REPAIR

Most damage to skirts occurs in the rear panel. This damage can be avoided by trimming the craft correctly, driving carefully, avoiding snags and sharp objects and avoid sliding backwards when departing from a parked position on a hill. Try to prevent the skirt from sliding under the skids when landing or departing.

The vinyl coated nylon glues better than other skirt materials and when correctly applied, the corners can be glued without sewing (ditto with Neoprene and Harrad adhesive.) Patches can also be glued without sewing. Tears can be repaired with inside outside patches or by whip stitching the tear with 1.8 inch [46 mm] stitch spacing. For increased wear resistance, coat the exposed thread with vinyl or urethane glue. The inside outside patch is done by putting the patch on the inside in the forward direction and on the outside in the aft direction. Seams can also be riveted using Aluminum Solid or pop rivets with aluminum back up washers inside and out. Seams must be riveted before skirt is attached.

MOUNT THE PROPELLER

Attaching hub 46 to shaft:

1) Do not use oil when assembling propeller mounting hub. Oil will increase outward pressure on hub up to ten times the allowance resulting in a cracked hub.
2) Slide bushing onto shaft with keyway in place. The key should not extend beyond either end of the assembly.
3) If the bushing has a raised keyway the hub will not fit onto the bushing. This keyway will need to be ground off. *Do not machine a keyway into the hub*.
4) Inset 2- 5/16" (4.5 & 5.5) hub mounting bolts. Make finger tight while pushing the hub and bushing together.
5) Tighten the bolts evenly using a torque wrench. Alternate from bolt to bolt every half turn while tightening up to the max torque. See following torque recommendations.
6) Use the specified torques and *do not tighten the bushing until it touches the hub.*

Specified Torque:

- 5/16” [127 mm] - 6 ft/lbs (72 in/lbs) [8.3 N/m]
- 3/8” [10 mm] - 8 ft/lbs. (96 in/lbs) [11 N/m]

Attaching propeller to hub:

1. Slide propeller onto shaft. Shaft should extend at lease1 [25 mm] inch into propeller or fan for centering.
2. Tighten bolts with wrench, socket or torque wrench in a clockwise direction. Do not use oil as lubrication.
3. Use 7/16” [11 mm] washer on the 3/8”-16 [M10 x 1.5 mm] bolts.
4. Use the following torque patterns:
   1,3,2,4

Specified Torque:

- 3/8” (8 - 10 ft/lbs [8.3 – 13.8 N/m]) or until washer slightly deforms the surface of the propeller wood.

VACUUM BAGGING

This technique can be used to obtain excellent bonding of foam plywood and fiberglass. It is an interesting technique and teachers and students might wish to utilize for the additional benefit of a learning exercise. The two most common types of vacuum bagging are surface and enclosed bag. The surface is any flat level surface including a large table or a concrete floor. Note that the hull will resemble the surface it is vacuumed to. The bagging process begins when the Styrofoam pieces that make the hull are ready to be glued together. Use 2 workers, one to mix the epoxy and the other to spread the epoxy over the Styrofoam. The work area should remain at 60-85 degrees F° (21° C) until the epoxy is cured.

Materials Needed:

4 blankets (large enough to cover the craft 2 times)

1 Roll (0.005in [0.13mm]) Polyethylene 10ft X 20ft (3048 X 6096 mm) thin plastic clear or natural color

4 6 mm plastic sheets larger than the hull on all sides (polyethylene or polypropylene.)

2 6 mm plastic sheets larger and wider than the hull (polyethylene or polypropylene.)

20 Ft (6096 mm) of 1¼ in (32 mm) diameter vacuum plastic hose – drill small holes every 4” [120 mm] to 6” [152 mm].

1 Vacuum pump or shop vac

2 rolls of duct tape for holding vacuum bag together

1 paint roller

2 3” [76 mm] disposablepaint roller covers

several screws or nails to hold Styrofoam while vaccum bagging

Optional: bathroom scale

Lay 6 mm plastic over the floor or bench top. Lay the Styrofoam on top of the plastic. Mix epoxy for 2 - 3 minutes, and spread onto all Styrofoam on all surfaces. Spread the epoxy on with a paint roller like a thick coat of paint. Recoat if the epoxy soaks into the Styrofoam. Use long screws or nails to hold the Styrofoam in place while the epoxy is curing. Lay the 2nd piece of 6 mm plastic over the hull. Cover the entire hull with blanket. Lay the vacuum hose onto the hull. Cover all of the exposed hose with another blanket. If the optional scale is used, put the scale close to the center of the hull. The scale should read between 50-150lb [23 – 68 kg] when the vacuum is turned on. This setup should put about l lb. /sq. in. [0.07 k/cm^2] or 144 lbs. /sq. foot [703 kg/m^2] on the hull. The larger 0.13mm piece of plastic sheet is now draped over the hull. Tape the plastic down around the perimeter, 6” [152 mm] away from the hull. This will leave slack in the plastic until the vacuum is turned on. Attach the vacuum to the hose with adapters or duct tape. Turn the vacuum on. Within 30 seconds, the plastic should be pressed firmly up against the hull by outside air pressure. Check for leaks in the vacuum bag and seal with tape. Pull on the plastic in a few areas. It should be difficult to move. If it isn't, there are leaks in the bag. The leaks need to be found and taped. The vacuum should have some air moving over the motor. It may be necessary to position a fan next to the motor on the vacuum pump to cool the motor. Watch the setup for at least 1 hour before leaving. The vacuum should run for 4 - 12 hours until the sample epoxy in the mixing cup is cured (see figure 22).

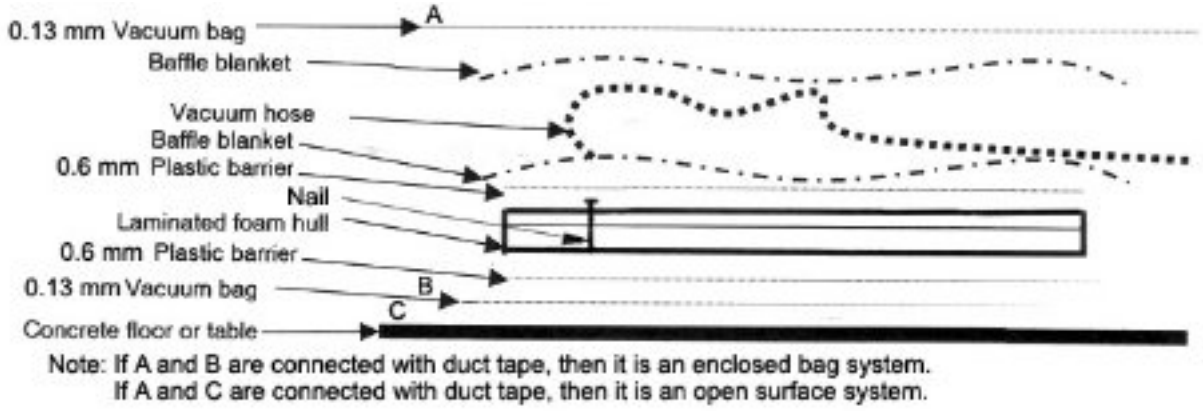

(Fig. 22)

The enclosed vacuum bag is the same except that there is no level surface to vacuum to, so the bag goes around the entire hull. The plastic can either be one large piece folded in half, or 2 pieces. The bag on the top and bottom are taped together at the seams. The first piece of plastic is the larger one. Lay the small piece of plastic, then the hull. After the hull is glued, lay another small piece of plastic over the top. Place 6 mm plastic to prevent the blanket from sticking to the Epoxy. Next place the blanket, then the hose and then another blanket. Finally, cover the hull with the other 0.13 mm plastic. Fold the larger piece over the hull. Tape the seams and apply the vacuum. Check for leaks. Carefully remove the vacuum bag and save for another job.

DRIVING YOUR HOVERCRAFT

You will probably have to teach yourself to drive your hovercraft. So proceed with caution. Start by using just enough power to lift off. Rock the craft from side to side; move your weight around and feel the stability of the craft. Shut off the power and notice how long it takes for the craft to sit back down on its skids. Since the skids are the best brakes for emergency stopping. Cushion delay time is the time in seconds from shutting off throttle or killing the engine until the craft touches down on its skids or on the water surface.

After a few test runs to get the engine and controls adjusted properly, the craft may be test flown. Before starting the engine a complete check of all systems should be made. Check all fastenings on the engine, mount, propeller and controls. See that they are tight. Remove all loose pieces of material from the immediate area. Never run a vehicle in an enclosed garage. The air flow may cause loose object to be drawn into the fan and the exhaust gases will reach a dangerous level in a short time. The fuel system should be checked for leaks. The throttle controls should be checked for free operation. For the first run, the vehicle should be tied or held in place. The engine run slowly at first, checking for any unusual vibrations or noise. The RPM is slowly increased to full power. If there are any unusual noises or vibrations the engine should be shut down immediately and the defect found and corrected. Be sure to follow break-in procedures on new engine. After the first run, inspect all fastenings for looseness. If fasteners do come loose, they should be safely wired or cotter keyed in place. A loose or missing bolt could cause the propeller to be destroyed, and in some cases bending the crankshaft on the engine. Personal injury can result from the fast moving parts. The engine mounting and the propeller guard or covers should be checked for security and for signs of fatigue cracks before every outing and before every engine start.

The first free flight should be made on water or a clean grass field. There should be little or no wind. The vehicle should be driven a few feet and then turned around 180 degrees and driven back again. Be very cautious about picking up speed especially in windy conditions. Sometimes leaning will help in making a turn. In any case know all the characteristics of the vehicle before operating in windy weather. If you get in trouble don't be afraid to set the vehicle down on its skids. Normal stops should be practiced by doing a 180-degree turn and holding thrust power on until the vehicle stops. Then shut down the engine. You will notice that steering is only effective when thrust air is flowing rapidly over the rudders. More thrust means better steering.

Sometimes it is difficult to turn out of a headwind. By leaning in the direction of the desired turn you will cause the skirt to drag on the surface. This increased drag can help turn the vehicle. When the vehicle is sliding sideways, it may be turned back to the forward traveling position by leaning back, causing drag at the rear and permitting the front to travel faster than the back which rotates the vehicle. It requires much skill and practice to stop the rotation at the desired position. There are times you may have to use this method of control even on a vehicle equipped with good rudders.

There is also a method of turning a vehicle in a zero turning radius on a smooth level surface. By leaning forward and to the left side, the vehicle will rotate clockwise or turn right. Leaning forward and to the right or backward and left will cause counterclockwise rotation. This operation works better on water than on land and better with a bag skirt and a rectangular shaped hovercraft. A hovercraft can even be backed slowly by leaning back!

A hovercraft may also be spun in several 360 degree turns while stopped or while operating at speed. On water, this maneuver should be tried in calm water and while traveling in the direction of the wind. This will permit more turns before the vehicle looses its planning speed. DO NOT exceed 25 MPH [42 km/h] when trying these maneuvers.

There are a few maneuvers which should be practiced to develop coordination. The first is driving in a circle over land, first in calm weather, then in windy weather. Second is to drive a straight line on a sloping surface, making 180 degree turns at the end and driving back. The third maneuver is driving between obstacles like traffic cones.

TRAILERS

Many small hovercraft, up to about 500 lb [225 kg] and 6 ½ ft [1981 mm] wide can be carried on car tops. A good strong set of car top carriers (two sets will be stronger) will work well if you have people available to lift the craft. A trailer makes loading and unloading much easier.
Boat trailers can be modified or a trailer can be built from parts. The trailer will generally be very light in weight (usually less than 500 lb [225 kg]) as the hovercraft it will carry will be lighter than an equivalent sized boat.

IMAGES

craft-upside-down

side-wall-installation-side

front-view-hull-with-duct

foam-bent-around-duct

side-wall-installation-front

air-box-holes-from-bottom

bottom-hull [1]

cockpit-walls-with-front

duct-on-hull-with-jig

duct-on-hull-with-support

duct-on-hull

finished-cockpit

finished-duct-with-inlet

finished-thrust-duct

bottom-hull [2]

rudder-assembly-with-push

PARTS LIST FOR DISCOVER HOVER ONE

PART #	PRODUCT CODE	QTY	DESCRIPTION	MATERIAL	USED ON	USED ON #
1	17143	1	MAIN DECK P3	PLYWOOD 3 mm	HULL ASSEMBLY	50
2	17144	1	MAIN DECK PANEL 1	PLYWOOD 3 mm	HULL ASSEMBLY	50
3	17145	1	MAIN DECK PANEL 2	PLYWOOD 3 mm	HULL ASSEMBLY	50
4	17146	2	COCKPIT SIDE	PLYWOOD 3 mm	BODY ASSEMBLY	51
5	17147	1	COCKPIT TOP	PLYWOOD 3 mm	BODY ASSEMBLY	51
6	17148	1	ENGINE POST	WOOD	ENGINE MOUNT SUB	49
7	17149	1	BRACKET RIGHT	STEEL OR ALUMINUM	ENGINE MOUNT SUB	49
8	17150	1	BRACKET LEFT	STEEL OR ALUMINUM	ENGINE MOUNT SUB	49
9	17151	1	HULL FOAM BLOCK 2(RH)	FOAM 51mm	HULL ASSEMBLY	50
10	17152	1	HULL FOAM BLOCK 3 (LF)	FOAM 51mm	HULL ASSEMBLY	50
11	17153	2	HULL FOAM BLOCK 6	FOAM 51mm	HULL ASSEMBLY	50
12	17154	1	STIFFENER	PLYWOOD 3 mm	HULL ASSEMBLY	50
13	17155	1	STEERING STICK	STEEL TUBE 1"	CONTROL ASSEMBLY	56
14	17156	1	HULL FOAM BLOCK 5	FOAM 51mm	HULL ASSEMBLY	50
15	17157	2	STRINGER BOTTOM	WOOD	BODY ASSEMBLY	51
16	17158	2	BRACING FIN	WOOD	BODY ASSEMBLY	49
17	17159	1	NOSE BLOCK	WOOD	BODY ASSEMBLY	51
18	17160	2	RUDDER BRIDGE UPPER	WOOD	DUCT ASSEMBLY	47
19	17161	2	RUDDER BRIDGE LOWER	WOOD	DUCT ASSEMBLY	47
20	17162	2	STRINGER TOP	WOOD	BODY ASSEMBLY	51
21	17163	4	WEDGE	WEDGE	ENGINE MOUNT SUB	49
22	17164	1	SEAT BACK	PLYWOOD 3 mm	BODY ASSEMBLY	51
23	17165	2	SKIRT ATTACHMENT STRIP F/R	PLYWOOD 3 mm	HULL ASSEMBLY	50
24	17166	2	SKIRT ATTACHMENT STRIP SIDE	PLYWOOD 3 mm	HULL ASSEMBLY	50
25	17167	2	SUPPORT	WOOD	BODY ASSEMBLY	51
26	17168	2	AIRBOX INFILL	PLYWOOD 3 mm	DUCT ASSEMBLY	48
27	17169	1	FRONT INFILL	PLYWOOD 3 mm	BODY ASSEMBLY	51
28	17170	1	SKID MOUNT FRONT	PLYWOOD 3 mm	HULL ASSEMBLY	50
29	17171	2	SKID MOUNT SIDE	PLYWOOD 3 mm	HULL ASSEMBLY	50
30	17172	1	SKIRT MOUNT FRONT	WOOD	HULL ASSEMBLY	50
31	17173	2	SKIRT MOUNT SIDES	WOOD	HULL ASSEMBLY	50
32	17174	1	SKIRT MOUNT REAR	WOOD	HULL ASSEMBLY	50
33	17175	1	ENGINE MOUNT	PLYWOOD 16 mm	ENGINE MOUNT SUB	49
34	17176	1	HULL FOAM BLOCK 1	FOAM 51mm	HULL ASSEMBLY	50
35	17177	1	HULL FOAM BLOCK 4	FOAM 51mm	HULL ASSEMBLY	50
36	17178	1	AIRBOX BACK	PLYWOOD 3 mm	DUCT ASSEMBLY	48
37	17179	1	AIRBOX TOP	PLYWOOD 3 mm	DUCT ASSEMBLY	48
38	17180	2	AIRBOX SIDE	PLYWOOD 3 mm	DUCT ASSEMBLY	48
39	17181	1	THRUST DUCT	FOAM 51mm	DUCT ASSEMBLY	48
40	17182	1	RUDDER TIE BAR	ALUMINUM	RUDDER ASSEMBLY	47
41	17183	2	RUDDER ARM	WOOD	RUDDER ASSEMBLY	47
42	17184	2	Æ19mm SPACER ID 10mm LONG	NYLON	RUDDER ASSEMBLY	47
43	17185	2	RUDDER	FOAM 51mm	RUDDER ASSEMBLY	47
44	17186	1	SCREEN	40 X 40 X 2 STEEL OR ALUMINUM	DUCT ASSEMBLY	48
45	17187	1	PROPELLER	3 PINE LAMINATION	DUCT ASSEMBLY	48
46	17188	1	PROP HUB	STEEL OR ALUMINUM	DUCT ASSEMBLY	48
47	17189	1	RUDDER SUB-ASSEMBLY		CONTROL ASSEMBLY	61
48	17190	1	THRUST DUCT ASSEMBLY		HOVERCRAFT	70, 100
49	17191	1	ENGINE MOUNT SUB-ASSEMBLY		BODY ASSEMBLY	51
50	17192	1	HULL ASSEMBLY		HOVERCRAFT	70,100
51	17193	1	BODY ASSEMBLY		HOVERCRAFT	70,100
52	17194	4	PURCHASED HANDLE	NYLON STRAP	HULL ASSEMBLY	70,100
53	17195	4	LANDING SKID	ALUMINUM	HULL ASSEMBLY	50
54	17196	1	FRONT HANDLE	ALUMINUM	BODY ASSEMBLY	51
55	17197	1	HAND THROTTLE	ALUMINUM	STEERING SUB-ASSEMBLY	56
56	17198	1	STEERING SUB-ASSEMBLY		CONTROL ASSEMBLY	61
57	17199	1	STEERING BLOCK	16mm PINE	HOVERCRAFT	61
58	17200	1	STEERING CABLE	STAINLESS AIRCRAFT	CONTROL ASSEMBLY	61
59	17201	1	THROTTLE CABLE	STAINLESS AIRCRAFT	CONTROL ASSEMBLY	61
60	17202	1	FRONT ATTACHMENT	ALUMINUM	BODY ASSEMBLY	51
61	17203	1	CONTROL ASSEMBLY		HOVERCRAFT	70,100
63	17205	1	DUCT BASE	PLYWOOD 3 mm	DUCT ASSEMBLY	48
64	17206	0	SKIRT CORNER	CARDBOARD OR PLYWOOD	SKIRT	66&67
65	17207	1	BODY BASE	PLYWOOD 3 mm	BODY ASSEMBLY	51
66	17208	1	SKIRT FRONT	NEOPRENE COATED NYLON	HULL ASSEMBLY	50
67	17209	2	SKIRT SIDE	NEOPRENE COATED NYLON	HULL ASSEMBLY	50
68	1297	2	FERRULE	ALUMINUM	THROTTLE CABLE	59
69	17211	1	SKIRT REAR	NEOPRENE COATED NYLON	HULL ASSEMBLY	50
70	17212	1	HOVERCRAFT ASSEMBLY EXPLODED			100

PARTS LIST FOR DISCOVER HOVER ONE

PART #	PRODUCT CODE	QTY	DESCRIPTION	MATERIAL	USED ON	USED ON #
71	17213	2	8mm x 63.5 or Ø5/16" x 2.5" UNF BOLT	STANDARD	ENGINE ASSEMBLY MOUNT	49
72	17214	2	8mm or Ø5/16" UNF NUT	STANDARD	ENGINE ASSEMBLY MOUNT	49
73	17215	4	19mm WOODEN DOWEL 127mm LONG	WOOD	RUDDER ASSEMBLY	47
74	17216	3	6.5mm x 38.1 or Ø1/4" x 1.5" UNF BOLT	STANDARD	RUDDER ASSEMBLY	47,56
75	17217	3	6.5mm or Ø1/4" UNF NUT	STANDARD	RUDDER ASSEMBLY	47,56
76	17218	1	HINGE .09 LEAF THICKNESS(13 GAUGE)	STANDARD	STEERING STICK SUB-ASSEMBLY	56
77	17219	1	TECUMSEH 12.5hp [9.3kw]	ENGINE	ENGINE MOUNT SUB-ASSEMBLY	49
78	3085	0.05ml	SAE 30	OIL	THROTTLE CABLE	59
79	3028	9245 mm	4mm I.D. CABLE CASING	STEEL	THROTTLE CABLE	59
80	3022	364in	1/16in AIRCRAFT CABLE	STAINLESS STEEL	STEERING & THROTTLE CABLE	58 & 59
81	2326	1	Ø50.8mm HOSE CLAMP	STANDARD	STEERING STICK SUB-ASSEMBLY	56
82	17224	200	1/2 x #6	STANDARD	HULL ASSEMBLY	50
83	17225	?	BOLTS	STANDARD	HOVERCRAFT	70
84	17226	?	NUTS	STANDARD	HOVERCRAFT	70
85	2062	30	FENDER WASHERS	STANDARD	HOVERCRAFT	70
86	17228	8YDS	CLOTH	FIBERGLASS (FINE)	CONTROL ASSEMBLY	61
87	17229	12 YDS	CLOTH	FIBERGLASS (COARSE)	HULL, DUCT & BODY ASSEMBLIES	50,59,51
88	17230	14	2 x 1-5/8"	STANDARD	HULL,CONTROLS & BODY ASSEMBLIES	50,51,61
89	17231	1 PINT	GLUE	CONTACT CEMENT	HULLASSEMBLY	50
90	3072	40in	25mm or WIDE STRAP 1"	NYLON	HANDLE	52
91	17233	60 FT.	STRING ABOUT Ø1/16" OR Ø1.5mm	NYLON	HULLASSEMBLY	50
92	17234	6	Ø3.0mm x 25mm or Ø1/8"x1" TUBING	COPPER	CONTROL ASSEMBLY	61
93	17235	12 OZ.	URETHAN FOAM	EXPANDING FOAM SEALANT	DUCT ASSEMBLY	48
94	17236	1GAL.	GLUE	EPOXY	HOVERCRAFT	70
95	17237	1 OZ.	3/4 x #18 NAILS	STANDARD	THRUST ASSEMBLY	39
96	17238	2	Ø921mm or Ø36-1/4 x 1/2"	1/2" PLYWOOD	THRUST ASSEMBLY	39
97	17239	32	1-1/4" SHEET ROCK(DRY WALL) SCREWS	STANDARD	DUCT ASSEMBLY	53
98	17240	4	PULLEY	STANDARD	CONTROL ASSEMBLY	61
99	3185	473 mL	HARRAD 628	NEOPRENE ADHESIVE	SKIRT JOINTS	66, 67, 69
100	17210	1	HOVERCRAFT ASSEMBLY			
101	17220	4	PULLEY WEDGE	1 1/2 x @ 30°	HOVERCRAFT ASSEMBLY	70
102	2125	16	1/4-20x3 HEX Z GRADE 5 BOLT	STANDARD	HOVERCRAFT ASSEMBLY	70
103	2037	16	1/4-20 NC HEX Z NUT	STANDARD	HOVERCRAFT ASSEMBLY	70
104	17221	16	8-32 x 3 [M4 x 0.07 x 76] BOLT	STANDARD	HOVERCRAFT ASSEMBLY	70
105	17222	16	8-32 NUT [0.07] NUT	STANDARD	HOVERCRAFT ASSEMBLY	70

DiscoverHover One AssemblyStructure

Part#Quantity			Description	
70			1 ea	HOVERCRAFT ASSEMBLY EXPLODED
	105		16 ea	8 - 32 NUT [0.07]
	85		16 ea	FENDER WASHERS
	50		1 ea	HULL ASSEMBLY
		34	1 ea	HULL FOAM BLOCK 1
		2	1 ea	MAIN DECK PANEL 1
		1	1 ea	MAIN DECK P3
		3	1 ea	MAIN DECK PANEL 2
		9	1 ea	HULL FOAM BLOCK 2(RH)
		10	1 ea	HULL FOAM BLOCK 3 (LF)
		35	1 ea	HULL FOAM BLOCK 4
		11	2 ea	HULL FOAM BLOCK 6
		14	1 ea	HULL FOAM BLOCK 5
		31	2 ea	SKIRT MOUNT SIDES
		32	1 ea	SKIRT MOUNT REAR
		30	1 ea	SKIRT MOUNT FRONT
		29	2 ea	SKID MOUNT SIDE
		28	1 ea	SKID MOUNT FRONT
		53	4 ea	LANDING SKID
		24	2 ea	SKIRT ATTACHMENT STRIPSIDE
		23	2 ea	SKIRT ATTACHMENT STRIPF/R
		69	1 ea	SKIRT REAR
		12	1 ea	STIFFENER
		66	1 ea	SKIRT FRONT
		67	2 ea	SKIRT SIDE
	48		1 ea	THRUST DUCT ASSEMBLY
		44	1 ea	SCREEN
		39	1 ea	THRUST DUCT
		46	1 ea	PROP HUB
		45	1 ea	PROPELLER
		26	2 ea	AIRBOX INFILL
		38	2 ea	AIRBOX SIDE
		37	1 ea	AIRBOX TOP
		63	1 ea	DUCT BASE

		36		1 ea	AIRBOX BACK
	61			1 ea	CONTROL ASSEMBLY
		57		1 ea	STEERING BLOCK
		47		1 ea	RUDDER SUB-ASSEMBLY
			43	2 ea	RUDDER
			73	4 ea	Æ19mm WOODEN DOWEL 127mm LONG
			18	2 ea	RUDDER BRIDGE UPPER
			74	2 ea	Æ6.5mm x 38.1 or Ø1/4" x 1.5" UNF BOLT
			75	2 ea	Æ6.5mm or Ø1/4" UNF NUT
			42	2 ea	Æ19mm SPACER ID 10mm LONG
			41	2 ea	RUDDER ARM
			19	2 ea	RUDDER BRIDGE LOWER
			40	1 ea	RUDDER TIE BAR
		56		2 ea	STEERING SUB-ASSEMBLY
			55	1 ea	HAND THROTTLE
			74	2 ea	Æ6.5mm x 38.1 or Ø1/4" x 1.5" UNF BOLT
			75	2 ea	Æ6.5mm or Ø1/4" UNF NUT
			13	1 ea	STEERING STICK
			76	1 ea	HINGE .09 LEAF THICKNESS(13 GAUGE)
			81	1 ea	Ø50.8mm HOSE CLAMP
		59		1 ea	THROTTLE CABLE
			68	2 ea	FERRULE
			80	96 in	1/16in AIRCRAFT CABLE
			79	2337 mm	4mm I.D. CABLE CASING
			78	0.05 ml	SAE 30
		58		1 ea	STEERING CABLE
			80	268 in	1/16in AIRCRAFT CABLE
		98		4 ea	PULLEY
		82		2 ea	1/2 x #6 OR 1/2 x #8 SCREWS
	51			1 ea	BODY ASSEMBLY
		4		2 ea	COCKPIT SIDE
		5		1 ea	COCKPIT TOP
		65		1 ea	BODY BASE
		20		2 ea	STRINGER TOP
		15		2 ea	STRINGER BOTTOM
		27		1 ea	FRONT INFILL
		54		1 ea	FRONT HANDLE

		17		1 ea	NOSE BLOCK
		60		1 ea	FRONT ATTACHMENT
		22		1 ea	SEAT BACK
		25		2 ea	SUPPORT
		49		1 ea	ENGINE MOUNT SUB-ASSEMBLY
			77	1 ea	TECUMSEH 12.5hp [9.3kw]
			33	1 ea	ENGINE MOUNT
			16	2 ea	BRACING FIN
			7	1 ea	BRACKET RIGHT
			8	1 ea	BRACKET LEFT
			71	1 ea	Æ8mm x 63.5 or Ø5/16" x 2.5" UNF BOLT
			72	1 ea	Æ8mm or Ø5/16" UNF NUT
			21	4 ea	WEDGE
			6	1 ea	ENGINE POST
			102	4 ea	1/4 - 20 x 3 HEX Z GRADE 5 BOLT
			85	8 ea	FENDER WASHERS
			103	4 ea	1/4 - 20 NC HEX Z NUT
	52			4 ea	PURCHASED HANDLE
	104			16 ea	8-32 x 3 [M4 x 0.07 x 76] BOLT
	88			4 ea	2 x 1-5/8", 8 x 3/4" (DRY WALL) SCREWS
	101			4 ea	PULLEY WEDGE

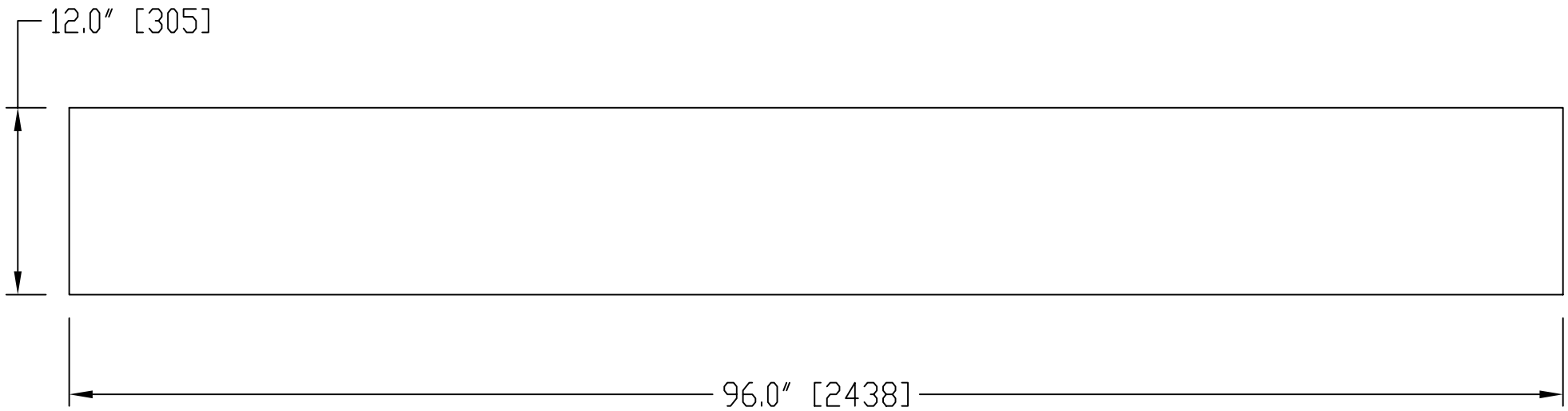

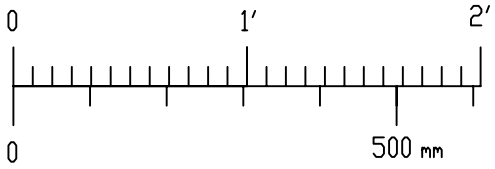

TOLERANCES:
UNLESS OTHERWISE SPECIFIED
DECIMAL: ±3mm
FRACTIONAL ±1/8
ANGULAR ±1°

DISCOVER HOVER ONE

© COPYRIGHT, WORLDHOVERCRAFT.ORG, 2004

DWG NAME:	MAIN DECK PANEL 3		
SCALE: AS SHOWN	USED ON: 50	ASSEMBLY NAME: HULL	
MATERIAL:	1/8″ [3mm] PLYWOOD 12″x96″ [305x2438]		
DRAWN BY:	M. Shima, D. Oelschlager, J. Schlottman, R. Wilson		
QUANTITY: 1	APPD BY: XXXXX	DWG NO. 1	
DATE:	JANUARY 2004		

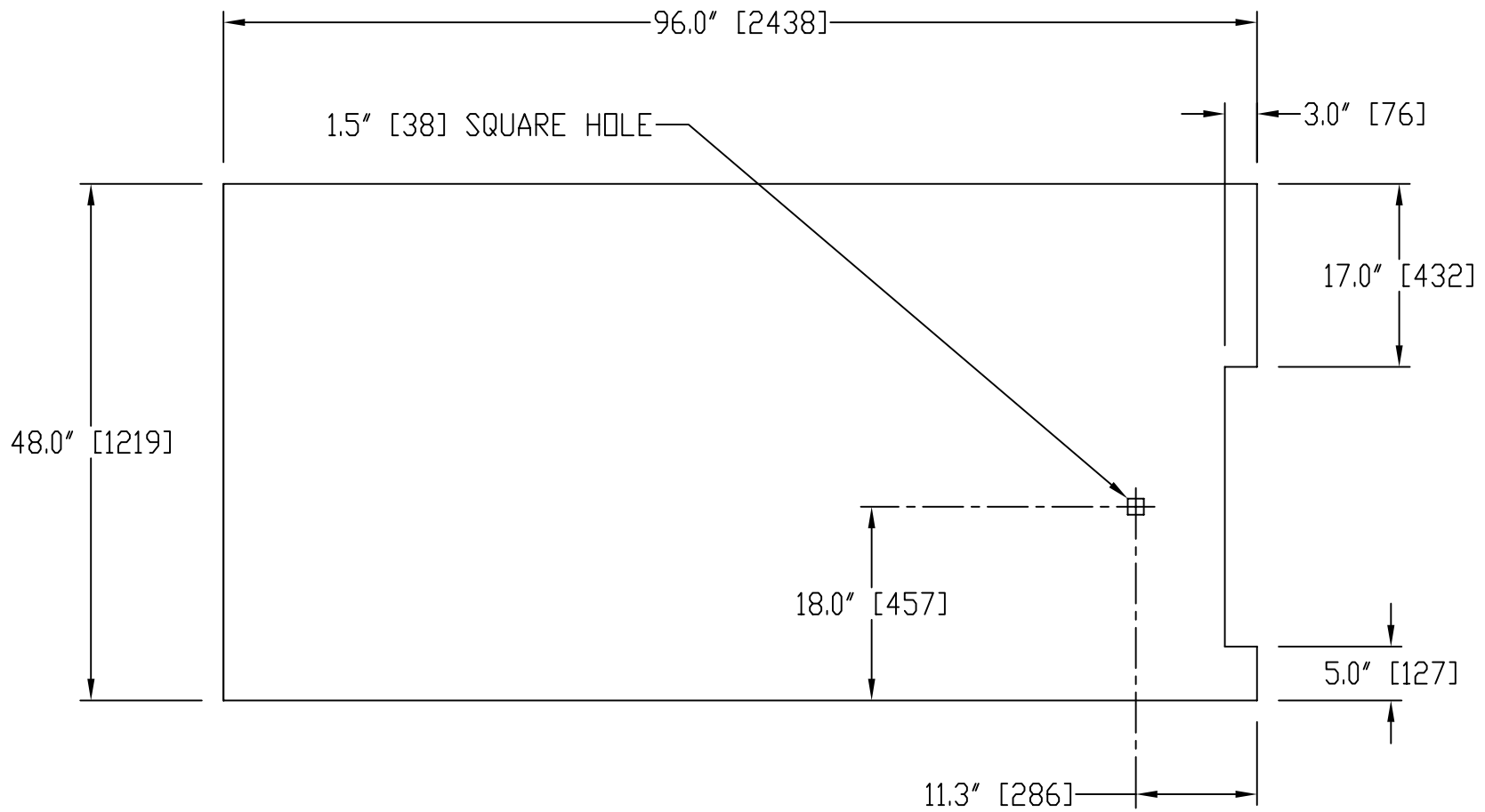

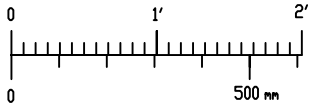

TOLERANCES:
UNLESS OTHERWISE SPECIFIED
DECIMAL: ±3mm
FRACTIONAL ±1/8
ANGULAR ±1°

DISCOVER HOVER ONE

© COPYRIGHT, WORLDHOVERCRAFT.ORG, 2004

DWG NAME:	MAIN DECK PANEL 1		
SCALE: AS SHOWN	USED ON: 50	ASSEMBLY NAME: HULL	
MATERIAL:	1/8″ [3mm] PLYWOOD 96″x48″ [2438x1219]		
DRAWN BY:	M. Shima, D. Oelschlager, J. Schlottman, R. Wilson		
QUANTITY: 1	APPD BY: XXXXX		DWG NO. 2
DATE:	JANUARY 2004		

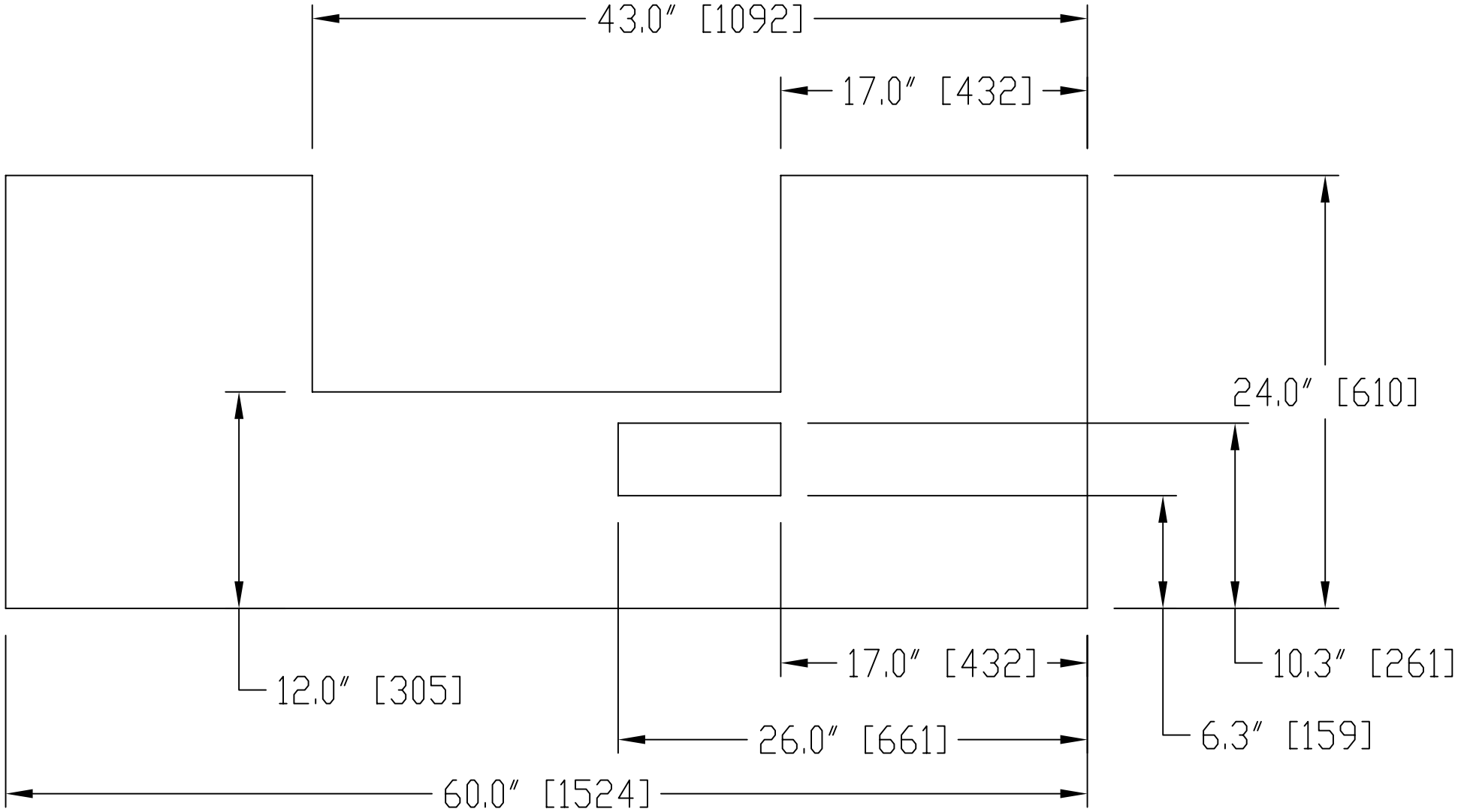

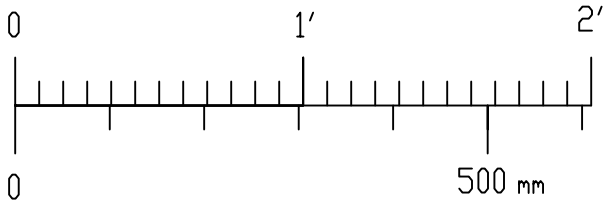

TOLERANCES:
UNLESS OTHERWISE SPECIFIED
DECIMAL: ±3mm
FRACTIONAL ±1/8
ANGULAR ±1°

DISCOVER HOVER ONE

© COPYRIGHT, WORLDHOVERCRAFT.ORG, 2004

DWG NAME:	MAIN DECK PANEL 2		
SCALE: AS SHOWN	USED ON: 50	ASSEMBLY NAME: HULL	
MATERIAL: 1/8″ [3mm] PLYWOOD 60″x24″ [1524x610]			
DRAWN BY: M. Shima, D. Oelschlager, J. Schlottman, R. Wilson			
QUANTITY: 1	APPD BY: XXXXX	DWG NO. 3	
DATE: JANUARY 2004			

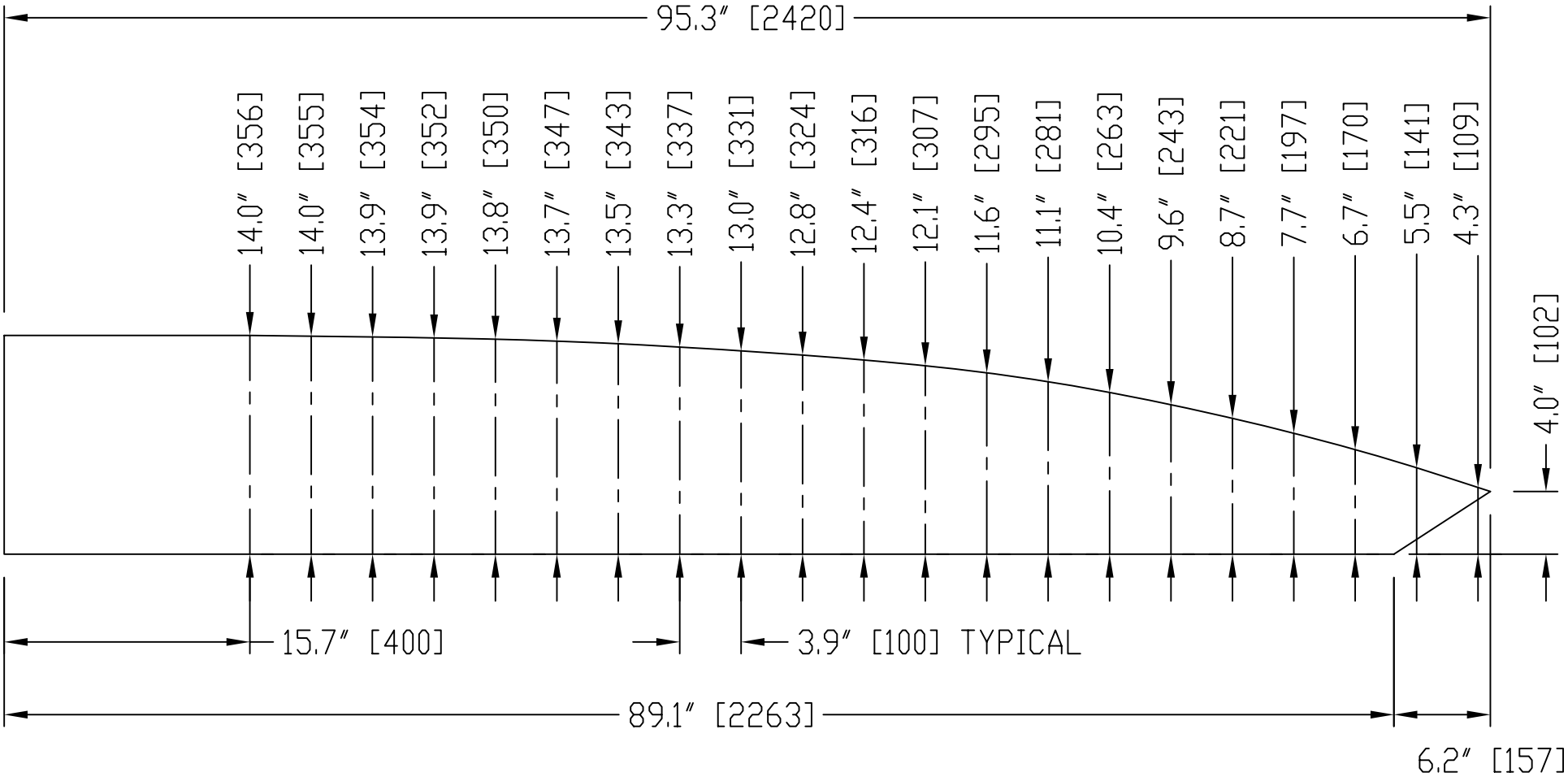

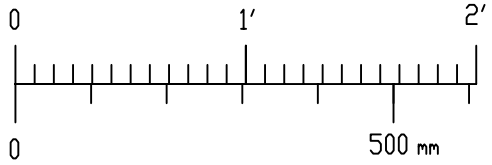

TOLERANCES:
UNLESS OTHERWISE SPECIFIED
DECIMAL: ±3mm
FRACTIONAL ±1/8
ANGULAR ±1°

DISCOVER HOVER ONE

© COPYRIGHT, WORLDHOVERCRAFT.ORG, 2004

DWG NAME:	COCKPIT SIDE		
SCALE: AS SHOWN	USED ON: 51	ASSEMBLY NAME: BODY	
MATERIAL:	1/8″ [3mm] PLYWOOD 14″x95.3″ [356x2420]		
DRAWN BY:	M. Shima, D. Oelschlager, J. Schlottman, R. Wilson		
QUANTITY: 1	APPD BY: XXXXX	DWG NO. 4	
DATE:	JANUARY 2004		

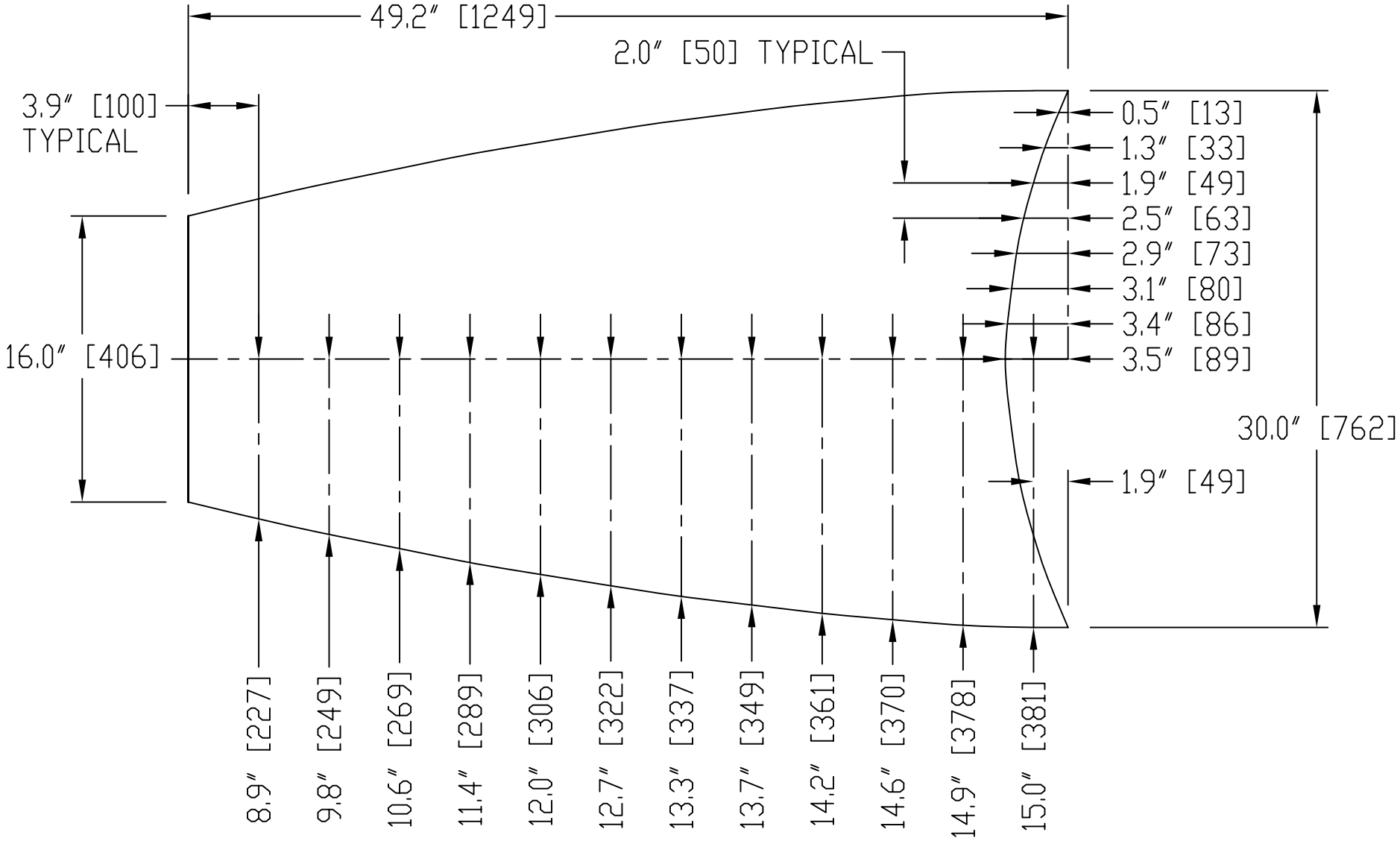

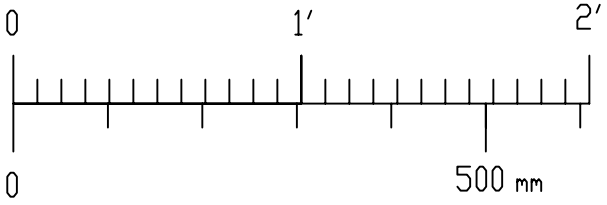

TOLERANCES: UNLESS OTHERWISE SPECIFIED
DECIMAL: ±3mm
FRACTIONAL ±1/8
ANGULAR ±1°

DISCOVER HOVER ONE

© COPYRIGHT, WORLDHOVERCRAFT.ORG, 2004

DWG NAME: COCKPIT TOP			
SCALE: AS SHOWN	USED ON: 51	ASSEMBLY NAME: BODY	
MATERIAL: 1/8″ [3mm] PLYWOOD 49.2″x30″ [1249x762]			
DRAWN BY: M. Shima, D. Oelschlager, J. Schlottman, R. Wilson			
QUANTITY: 1	APPD BY: XXXXX		DWG NO. 5
DATE: JANUARY 2004			

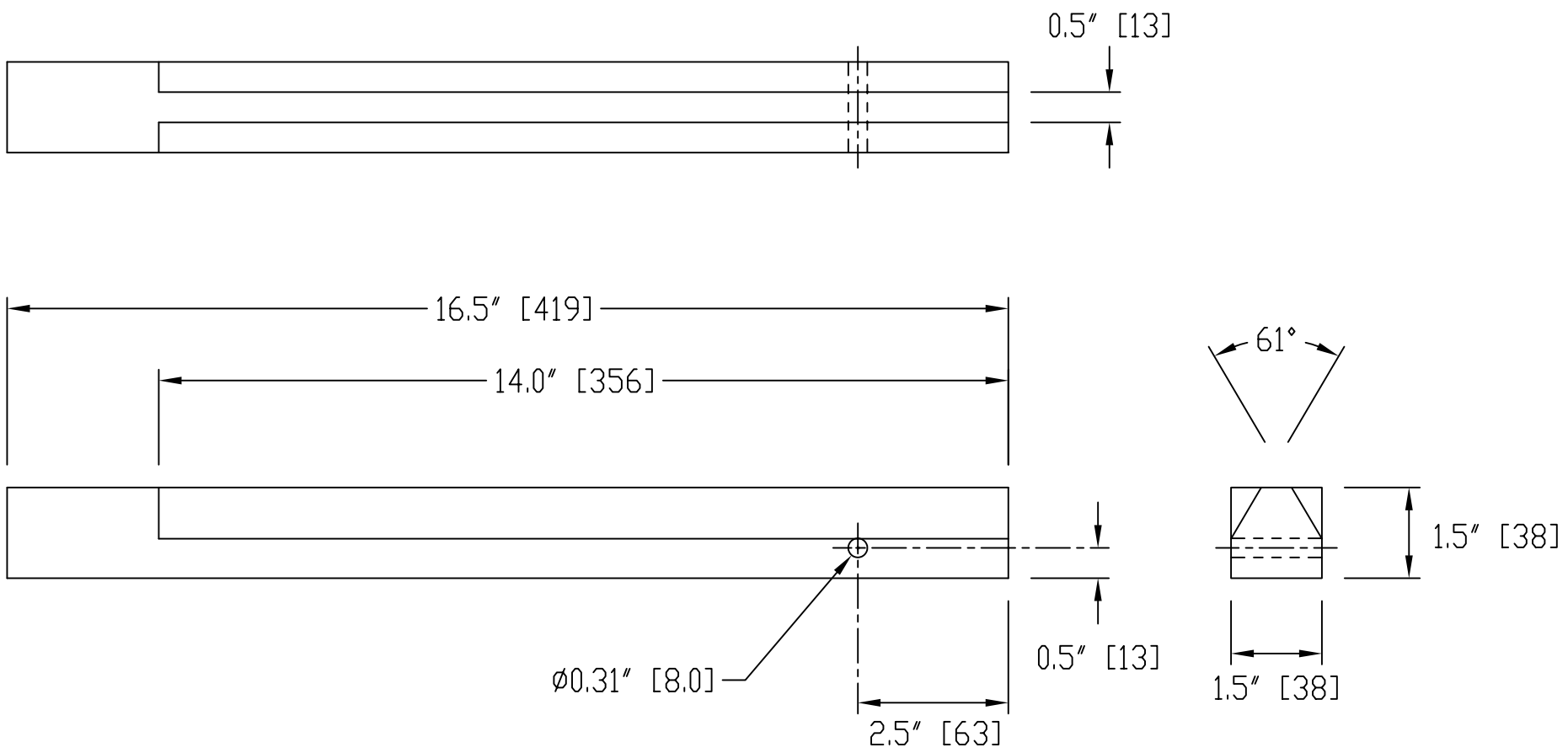

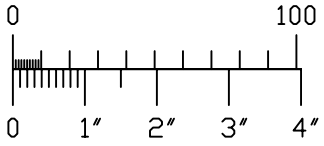

TOLERANCES: UNLESS OTHERWISE SPECIFIED
DECIMAL: ±3mm
FRACTIONAL ±1/8
ANGULAR ±1°

DISCOVER HOVER ONE

© COPYRIGHT, WORLDHOVERCRAFT.ORG, 2004

DWG NAME:	ENGINE POST		
SCALE: AS SHOWN	USED ON: 51	ASSEMBLY NAME: BODY	
MATERIAL:	MEDIUM DENSITY WOOD 1 1/2″x 1 1/2″ [38x38]		
DRAWN BY:	M. Shima, D. Oelschlager, J. Schlottman, R. Wilson		
QUANTITY: 1	APPD BY: XXXXX		DWG NO. 6
DATE:	JANUARY 2004		

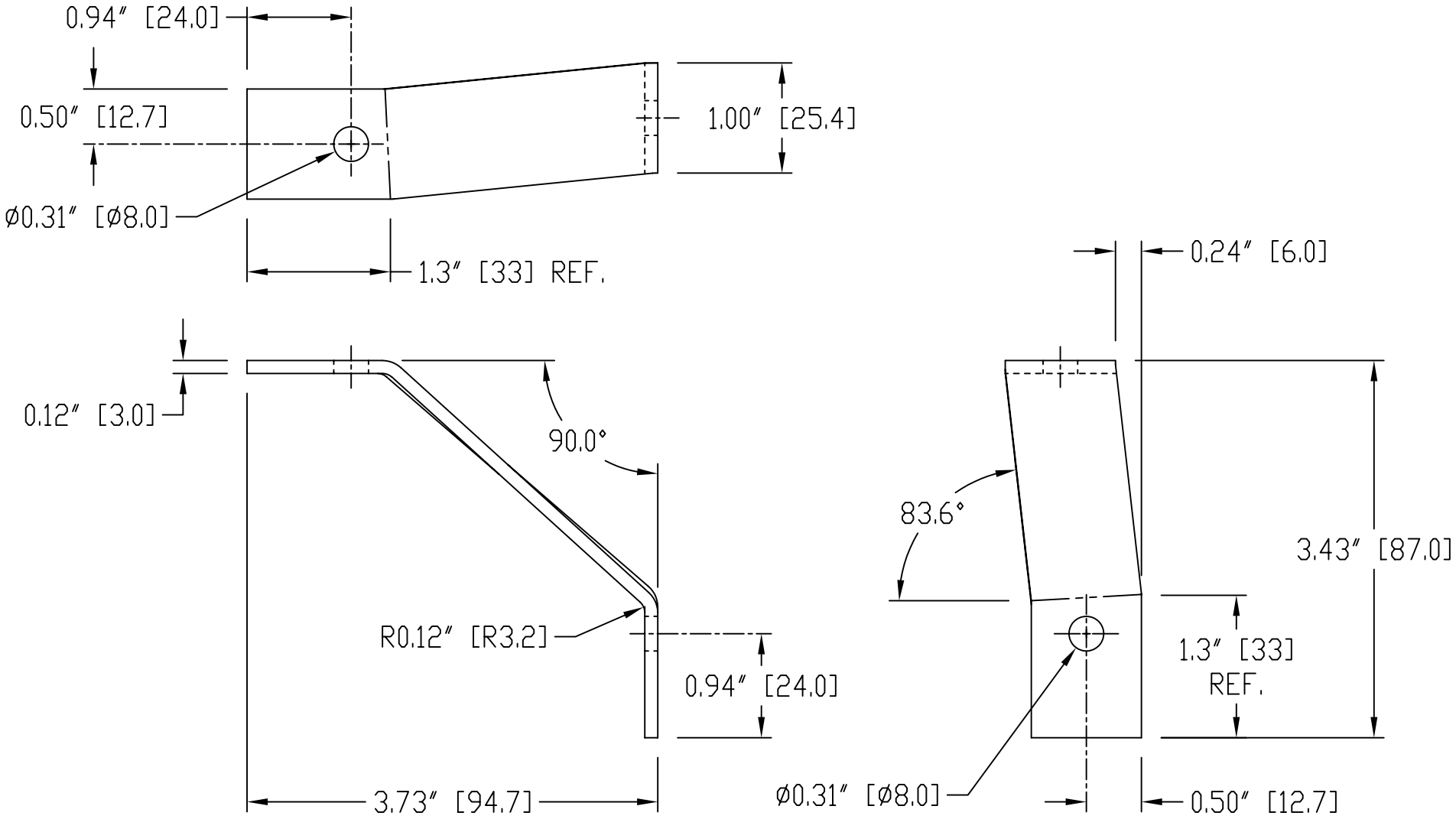

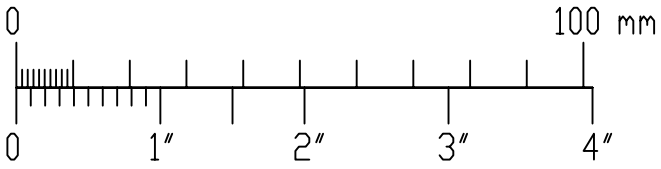

TOLERANCES:
UNLESS OTHERWISE SPECIFIED
DECIMAL: ±1.6mm
FRACTIONAL ±1/16
ANGULAR ±1°

DISCOVER HOVER ONE

© COPYRIGHT, WORLDHOVERCRAFT.ORG, 2004

DWG NAME:	BRACKET RIGHT		
SCALE: AS SHOWN	USED ON: 49	ASSEMBLY NAME: ENGINE MOUNT SUB	
MATERIAL:	MILD STEEL OR ALUMINIUM (1/2 HARD) 1/8″x1″x5.9″ [3x25x150]		
DRAWN BY:	M. Shima, D. Oelschlager, J. Schlottman, R. Wilson		
QUANTITY: 1	APPD BY: XXXXX		DWG NO. 7
DATE:	JANUARY 2004		

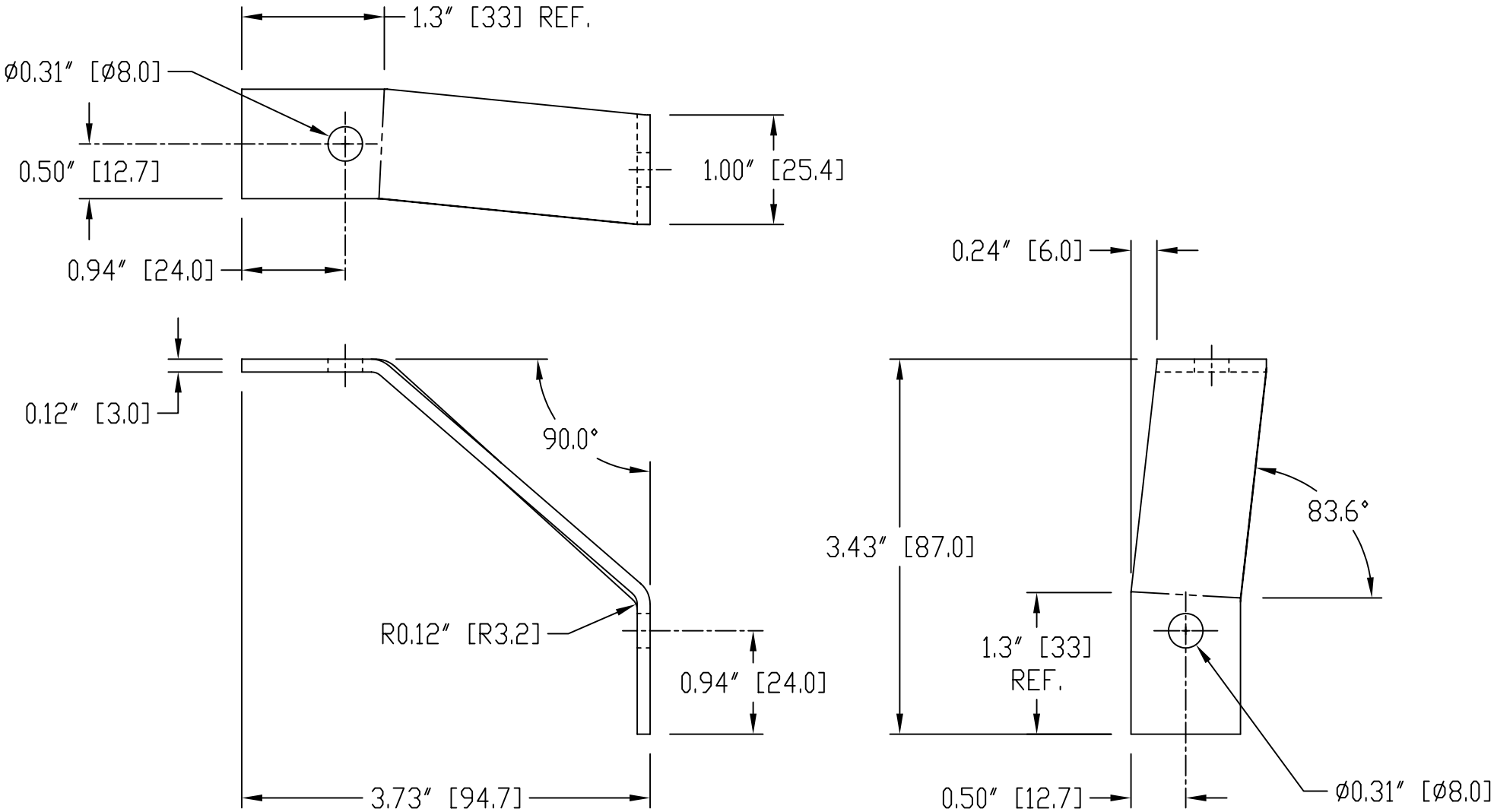

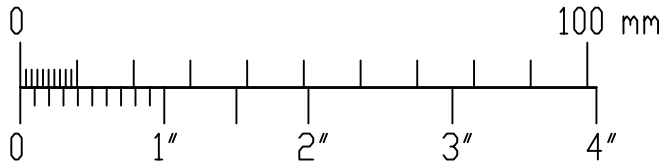

TOLERANCES:
UNLESS OTHERWISE SPECIFIED
DECIMAL: ±1.6mm
FRACTIONAL ±1/16
ANGULAR ±1°

DISCOVER HOVER ONE

© COPYRIGHT, WORLDHOVERCRAFT.ORG, 2004

DWG NAME:	BRACKET LEFT		
SCALE: AS SHOWN	USED ON: 49	ASSEMBLY NAME: ENGINE MOUNT SUB	
MATERIAL: MILD STEEL OR ALUMINIUM (1/2 HARD) 1/8″x1″x5.9″ [3x25x150]			
DRAWN BY: M. Shima, D. Oelschlager, J. Schlottman, R. Wilson			
QUANTITY: 1	APPD BY: XXXXX		DWG NO. 8
DATE: JANUARY 2004			

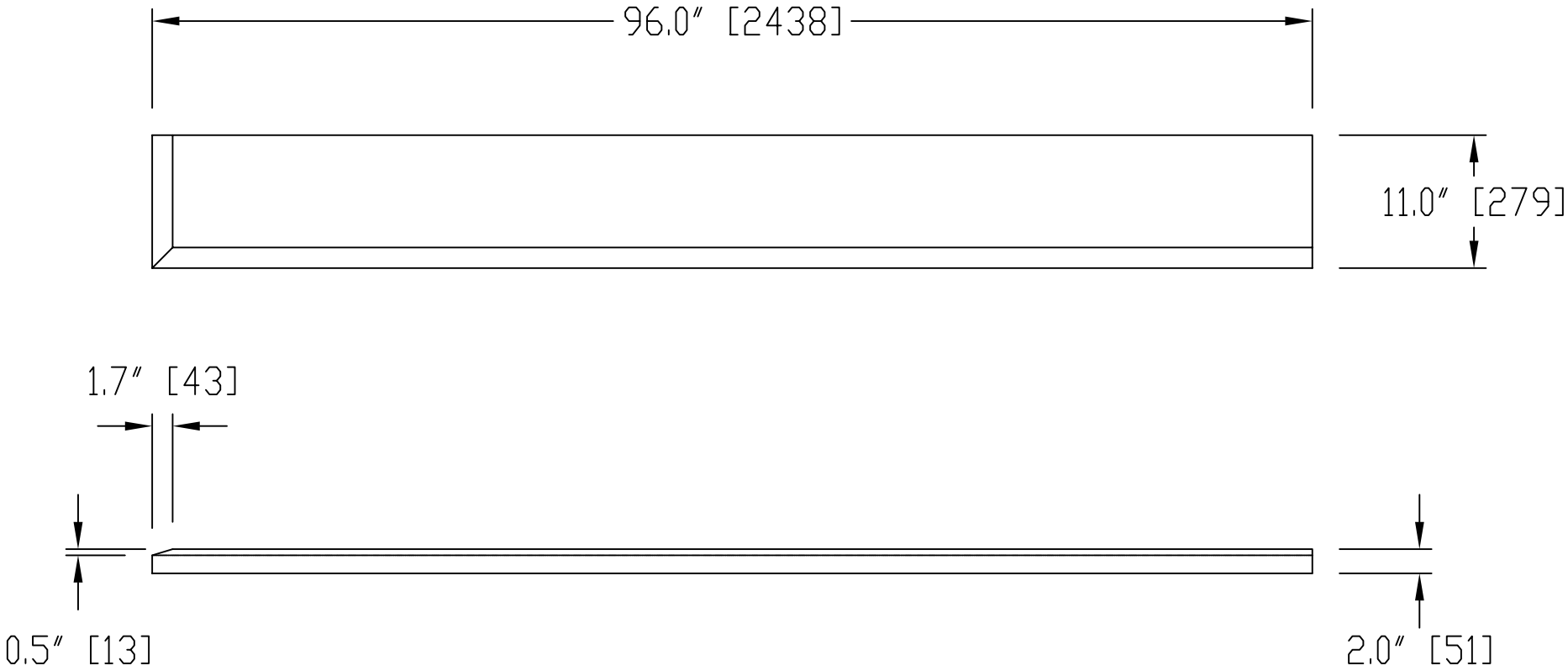

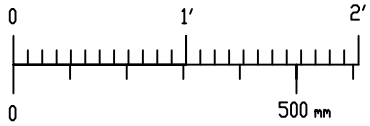

TOLERANCES:
UNLESS OTHERWISE SPECIFIED
DECIMAL: ±3mm
FRACTIONAL ±1/8
ANGULAR ±1°

DISCOVER HOVER ONE

© COPYRIGHT, WORLDHOVERCRAFT.ORG, 2004

DWG NAME:	HULL BLOCK 2 (RIGHT)		
SCALE: AS SHOWN	USED ON: 50	ASSEMBLY NAME: HULL	
MATERIAL:	POLYSTYRENE FOAM 2″x 11″x 96″ [51x279x2438]		
DRAWN BY:	M. Shima, D. Oelschlager, J. Schlottman, R. Wilson		
QUANTITY: 1	APPD BY: XXXXX	DWG NO.	
DATE:	JANUARY 2004		

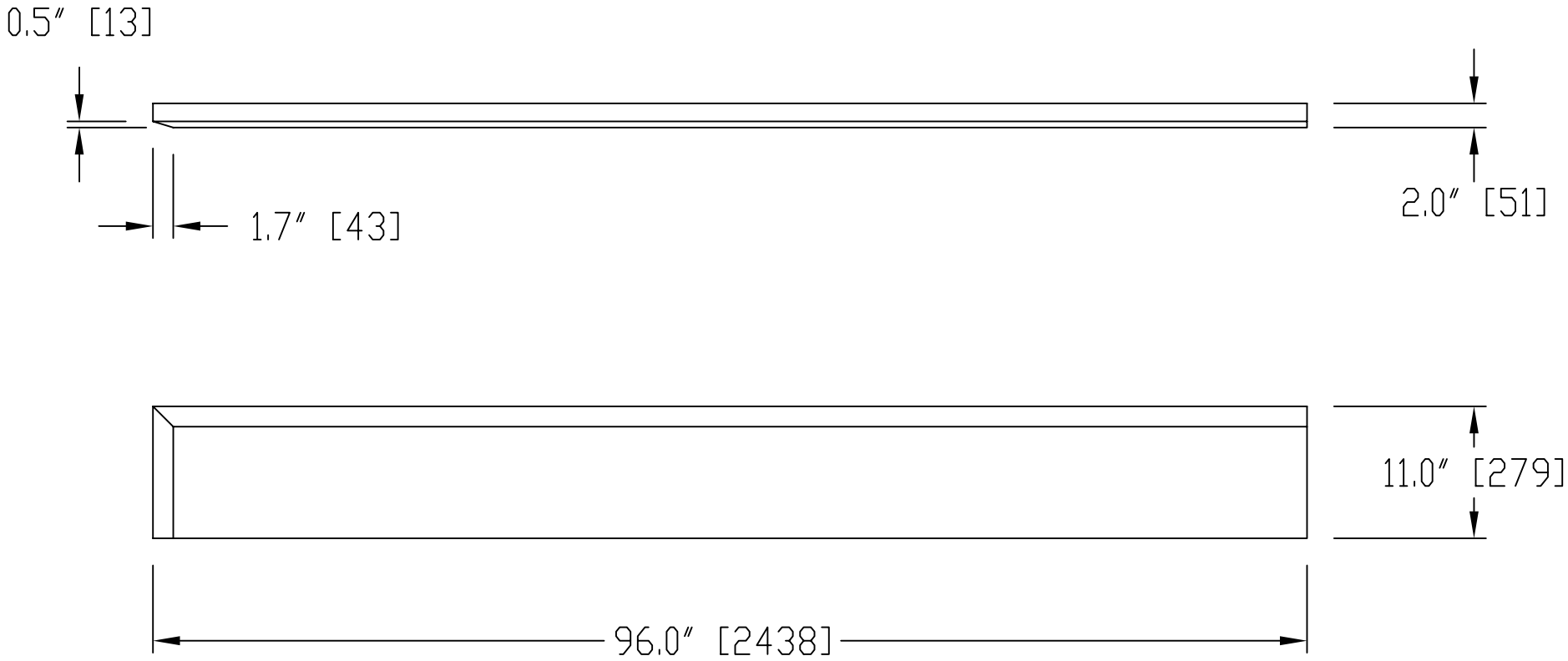

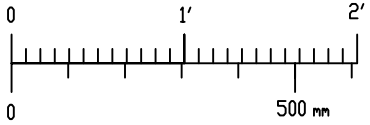

TOLERANCES:
UNLESS OTHERWISE SPECIFIED
DECIMAL: ±3mm
FRACTIONAL ±1/8
ANGULAR ±1°

DISCOVER HOVER ONE

© COPYRIGHT, WORLDHOVERCRAFT.ORG, 2004

DWG NAME:	HULL BLOCK 3 (LEFT)		
SCALE: AS SHOWN	USED ON: 50	ASSEMBLY NAME: HULL	
MATERIAL:	POLYSTYRENE FOAM 2″x 11″x 96″ [51x279x2438]		
DRAWN BY:	M. Shima, D. Oelschlager, J. Schlottman, R. Wilson		
QUANTITY: 1	APPD BY: XXXXX	DWG NO. 10	
DATE:	JANUARY 2004		

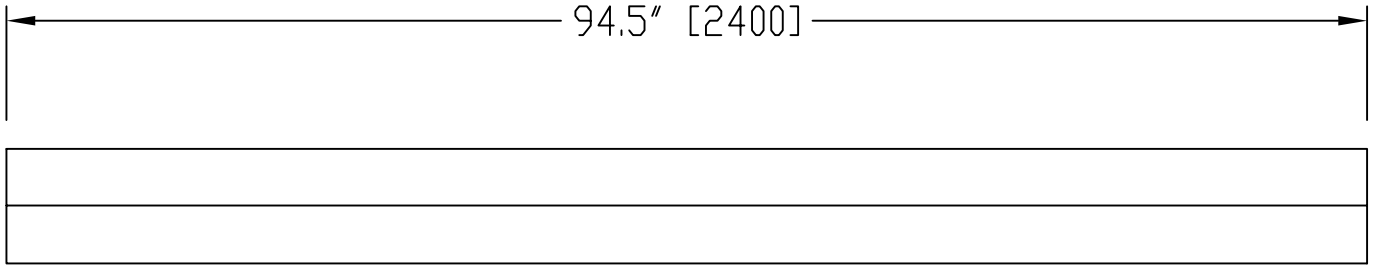

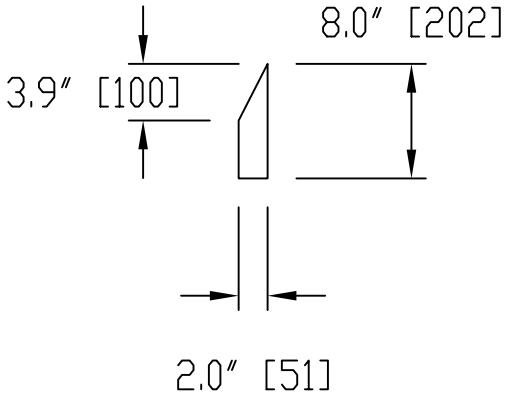

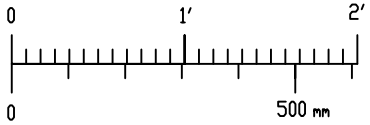

TOLERANCES:
UNLESS OTHERWISE SPECIFIED
DECIMAL: ±3mm
FRACTIONAL ±1/8
ANGULAR ±1°

DISCOVER HOVER ONE

© COPYRIGHT, WORLDHOVERCRAFT.ORG, 2004

DWG NAME:	HULL FOAM BLOCK 6		
SCALE: AS SHOWN	USED ON: 50	ASSEMBLY NAME: HULL	
MATERIAL:	POLYSTYRENE FOAM 94.5″x 8″x 2″ [2400x202x51]		
DRAWN BY:	M. Shima, D. Oelschlager, J. Schlottman, R. Wilson		
QUANTITY: 1	APPD BY: XXXXX		DWG NO. 11
DATE:	JANUARY 2004		

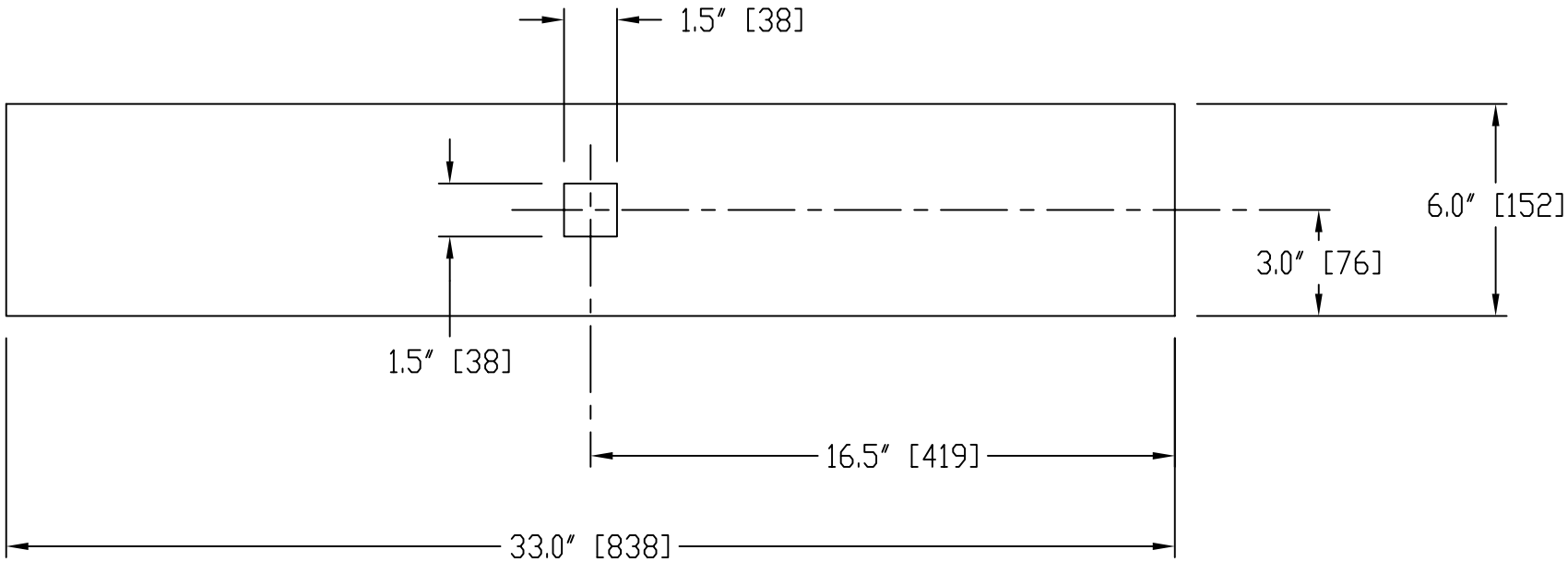

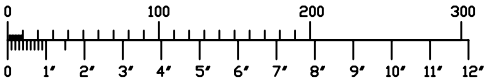

TOLERANCES:
UNLESS
OTHERWISE
SPECIFIED
DECIMAL:
±3mm
FRACTIONAL
±1/8
ANGULAR
±1°

DISCOVER HOVER ONE

© COPYRIGHT, WORLDHOVERCRAFT.ORG, 2004

DWG NAME:	STIFFENER		
SCALE: AS SHOWN	USED ON: 50	ASSEMBLY NAME:	HULL
MATERIAL:	1/8″ [3mm] PLYWOOD 33″x 6″ [838x152]		
DRAWN BY:	M. Shima, D. Oelschlager, J. Schlottman, R. Wilson		
QUANTITY: 1	APPD BY: XXXXX	DWG NO.	12
DATE:	JANUARY 2004		

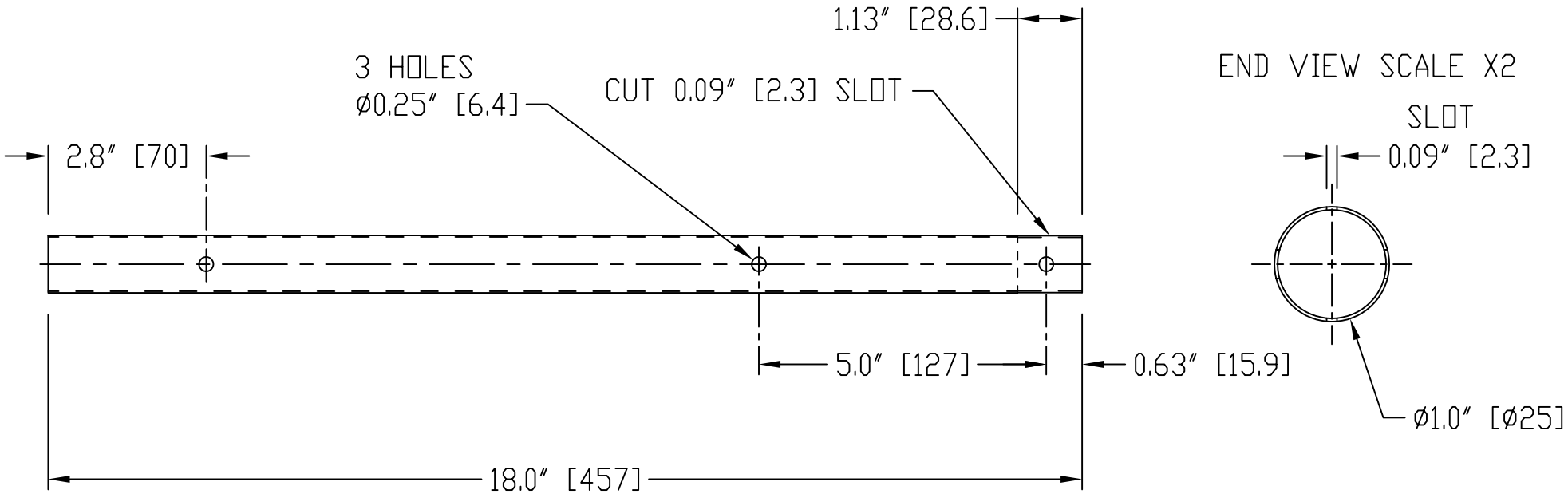

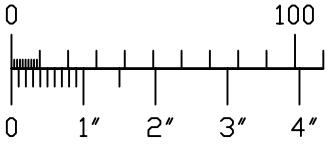

TOLERANCES: UNLESS OTHERWISE SPECIFIED
DECIMAL: ±1mm
FRACTIONAL ±1/32″
ANGULAR ±1°

DISCOVER HOVER ONE

© COPYRIGHT, WORLDHOVERCRAFT.ORG, 2004

DWG NAME:	STEERING STICK		
SCALE: AS SHOWN	USED ON: 61	ASSEMBLY NAME: CONTROL	
MATERIAL:	Ø1.0″ [25] x 18″ [457] THIN WALL STEEL CONDUIT		
DRAWN BY:	M. Shima, D. Oelschlager, J. Schlottman, R. Wilson		
QUANTITY: 1	APPD BY: XXXXX		DWG NO. 13
DATE:	JANUARY 2004		

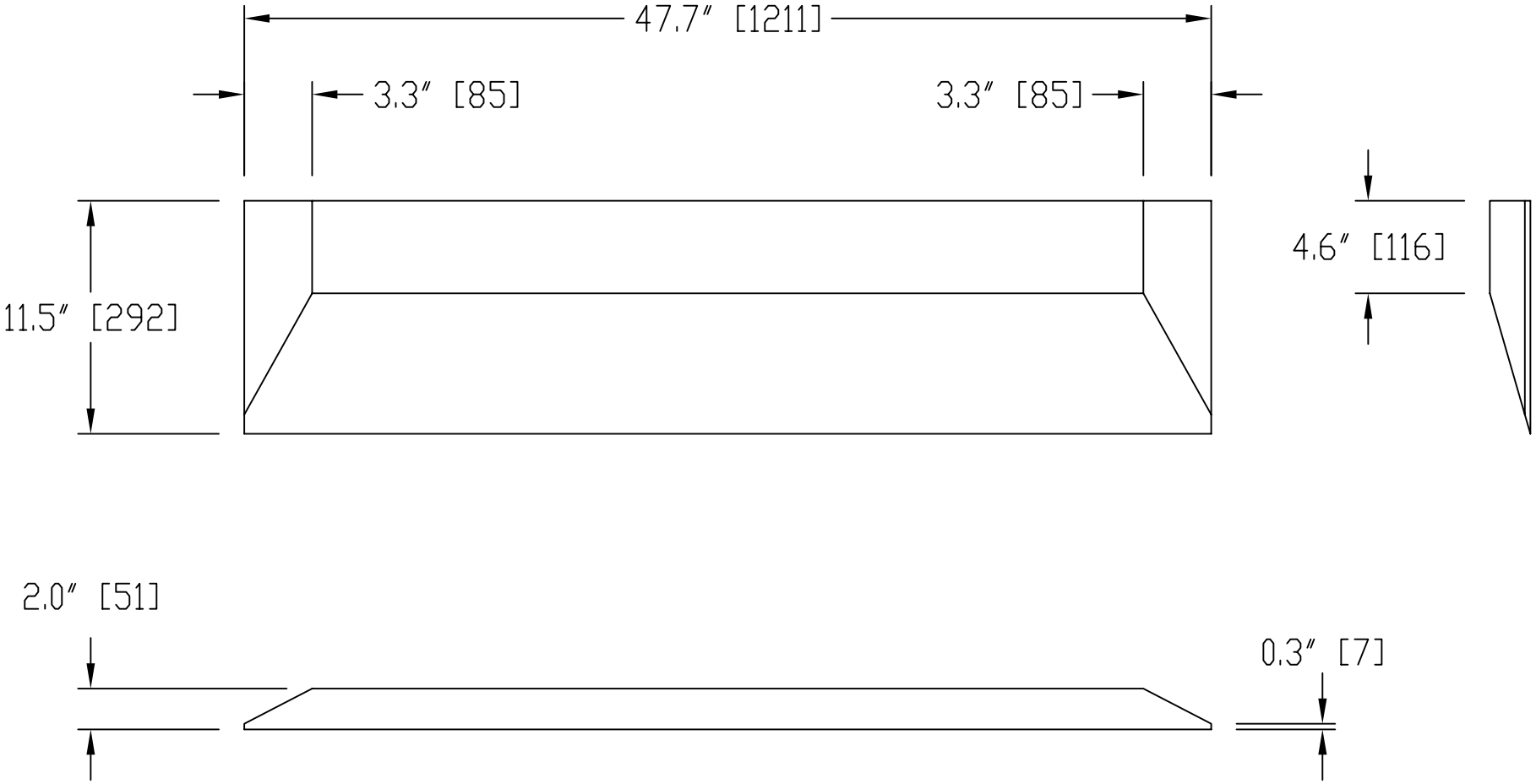

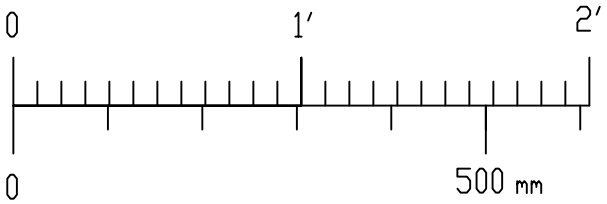

TOLERANCES:
UNLESS OTHERWISE SPECIFIED
DECIMAL: ±3mm
FRACTIONAL ±1/8
ANGULAR ±1°

DISCOVER HOVER ONE

© COPYRIGHT, WORLDHOVERCRAFT.ORG, 2004

DWG NAME:	HULL BLOCK 5		
SCALE: AS SHOWN	USED ON: 50	ASSEMBLY NAME: HULL	
MATERIAL:	POLYSTYRENE FOAM 47.7″x 11.5″x 2″ [1211x292x51]		
DRAWN BY:	M. Shima, D. Oelschlager, J. Schlottman, R. Wilson		
QUANTITY: 1	APPD BY: XXXXX		DWG NO. 14
DATE:	JANUARY 2004		

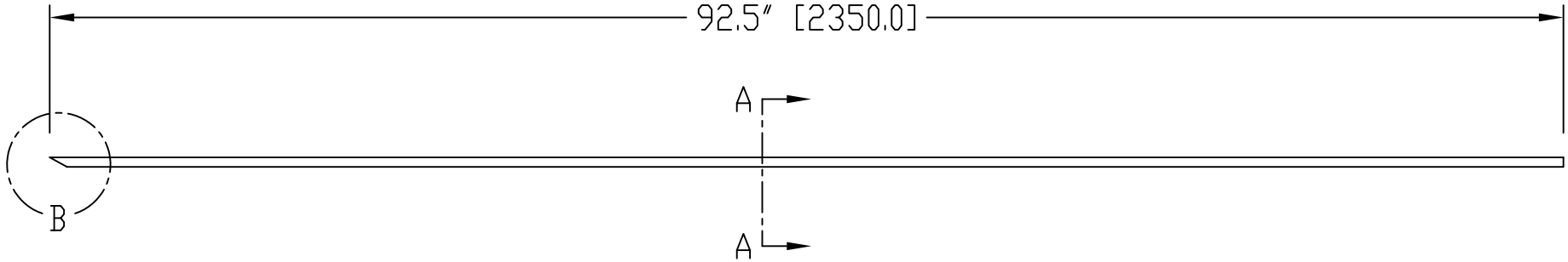

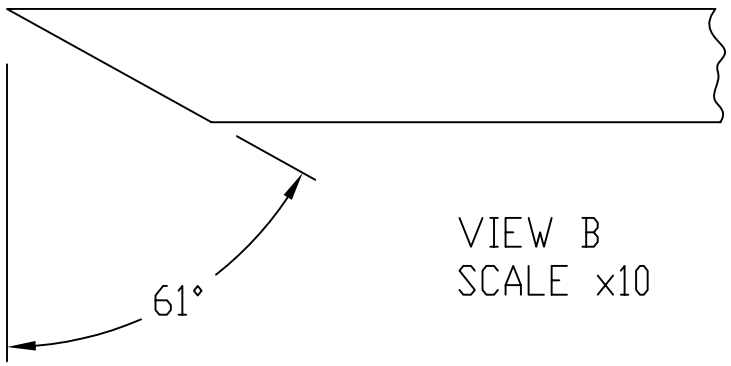

VIEW B
SCALE x10

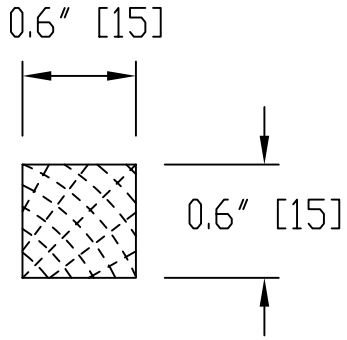

SECTION AA
SCALE x10

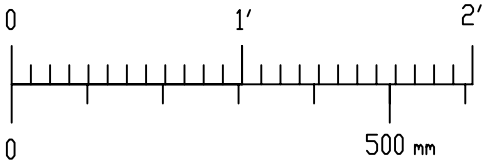

TOLERANCES:
UNLESS OTHERWISE SPECIFIED
DECIMAL: ±3mm
FRACTIONAL ±1/8
ANGULAR ±1°

DISCOVER HOVER ONE

© COPYRIGHT, WORLDHOVERCRAFT.ORG, 2004

DWG NAME:	STRINGER BOTTOM		
SCALE: AS SHOWN	USED ON: 51	ASSEMBLY NAME:	BODY
MATERIAL:	LOW DENSITY WOOD 92.5″x 0.6″x 0.6″ [2350x15x15]		
DRAWN BY:	M. Shima, D. Oelschlager, J. Schlottman, R. Wilson		
QUANTITY: 1	APPD BY: XXXXX		DWG NO. 15
DATE:	MARCH, 2004		

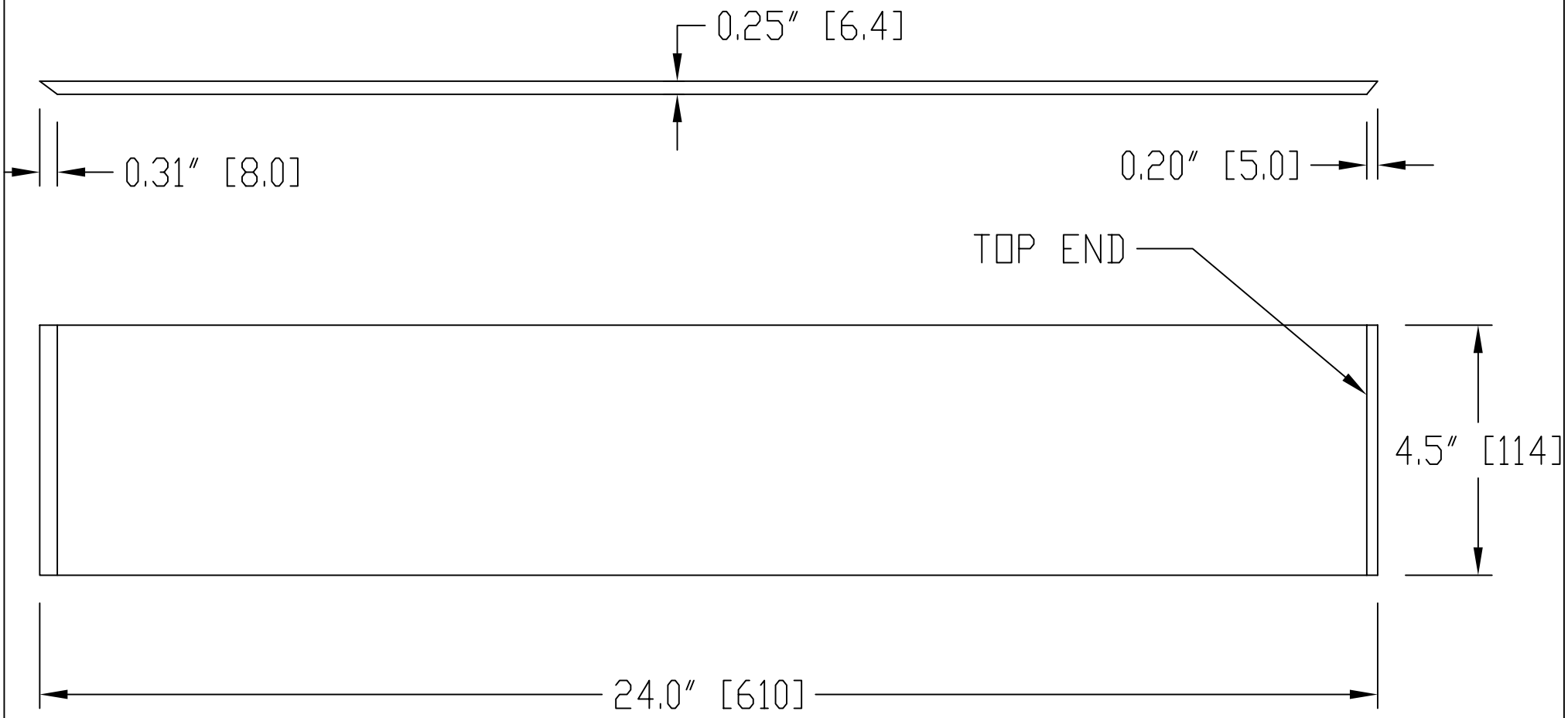

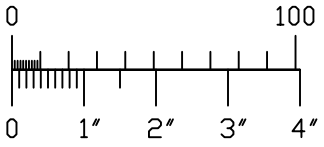

TOLERANCES: UNLESS OTHERWISE SPECIFIED
DECIMAL: ±1.6mm
FRACTIONAL ±1/16
ANGULAR ±1°

DISCOVER HOVER ONE

© COPYRIGHT, WORLDHOVERCRAFT.ORG, 2004

DWG NAME:	BRACING FIN		
SCALE: AS SHOWN	USED ON: 51	ASSEMBLY NAME:	BODY
MATERIAL:	1/4″ [6mm] LOW DENSITY PLYWOOD 24″x 4.5″ [610x114]		
DRAWN BY:	M. Shima, D. Oelschlager, J. Schlottman, R. Wilson		
QUANTITY: 1	APPD BY: XXXXX		DWG NO. 16
DATE:	JANUARY 2004		

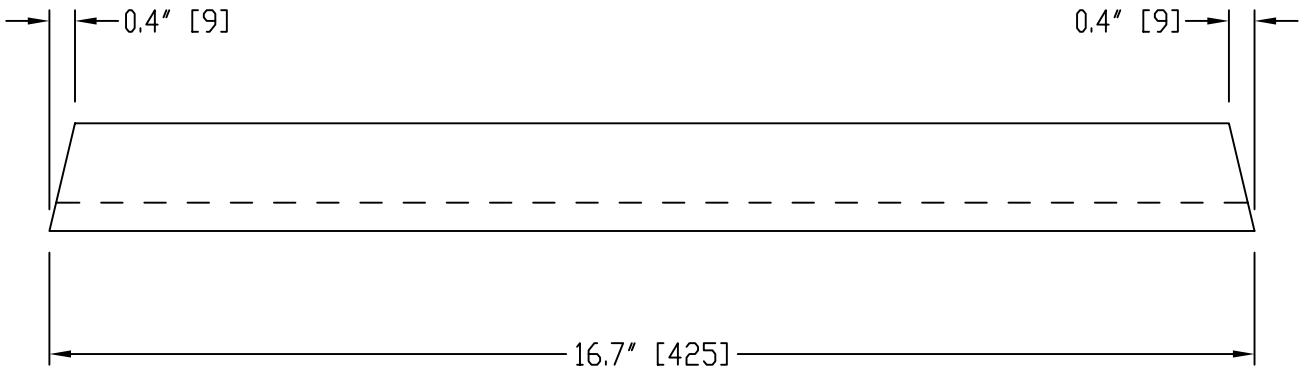

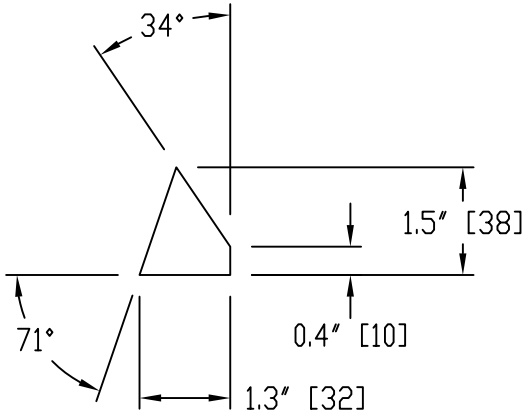

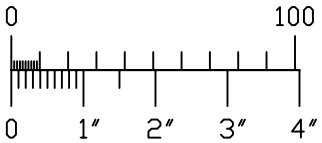

TOLERANCES: UNLESS OTHERWISE SPECIFIED
DECIMAL: ±1.6mm
FRACTIONAL ±1/16″
ANGULAR ±1°

DISCOVER HOVER ONE

© COPYRIGHT, WORLDHOVERCRAFT.ORG, 2004

DWG NAME:	NOSE BLOCK		
SCALE: AS SHOWN	USED ON: 51	ASSEMBLY NAME: BODY	
MATERIAL:	LOW DENSITY WOOD 16.8″x 1.5″x 1.3″ [425x38x32]		
DRAWN BY:	M. Shima, D. Oelschlager, J. Schlottman, R. Wilson		
QUANTITY: 1	APPD BY: XXXXX		DWG NO. 17
DATE:	JANUARY 2004		

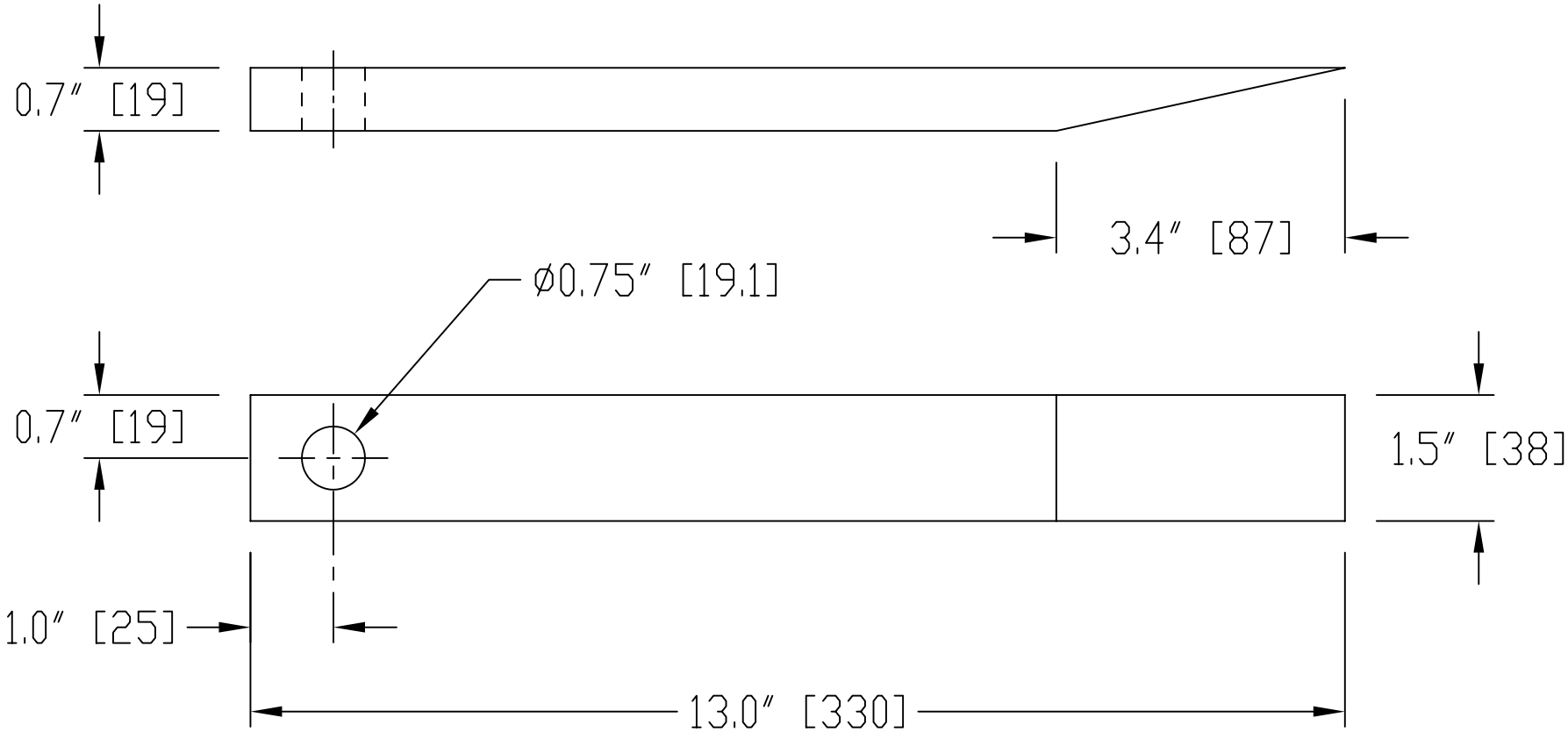

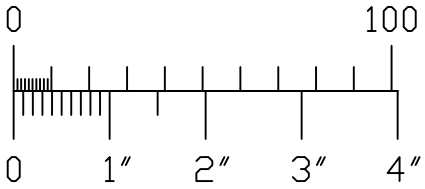

TOLERANCES: UNLESS OTHERWISE SPECIFIED
DECIMAL: ±1.6mm
FRACTIONAL ±1/16″
ANGULAR ±1°

DISCOVER HOVER ONE

© COPYRIGHT, WORLDHOVERCRAFT.ORG, 2004

DWG NAME:	RUDDER BRIDGE UPPER		
SCALE: AS SHOWN	USED ON: 47	ASSEMBLY NAME: DUCT	
MATERIAL:	LOW DENSITY WOOD 13″x 1.5″x 0.75″ [330x38x19]		
DRAWN BY:	M. Shima, D. Oelschlager, J. Schlottman, R. Wilson		
QUANTITY: 1	APPD BY: XXXXX		DWG NO. 18
DATE:	JANUARY 2004		

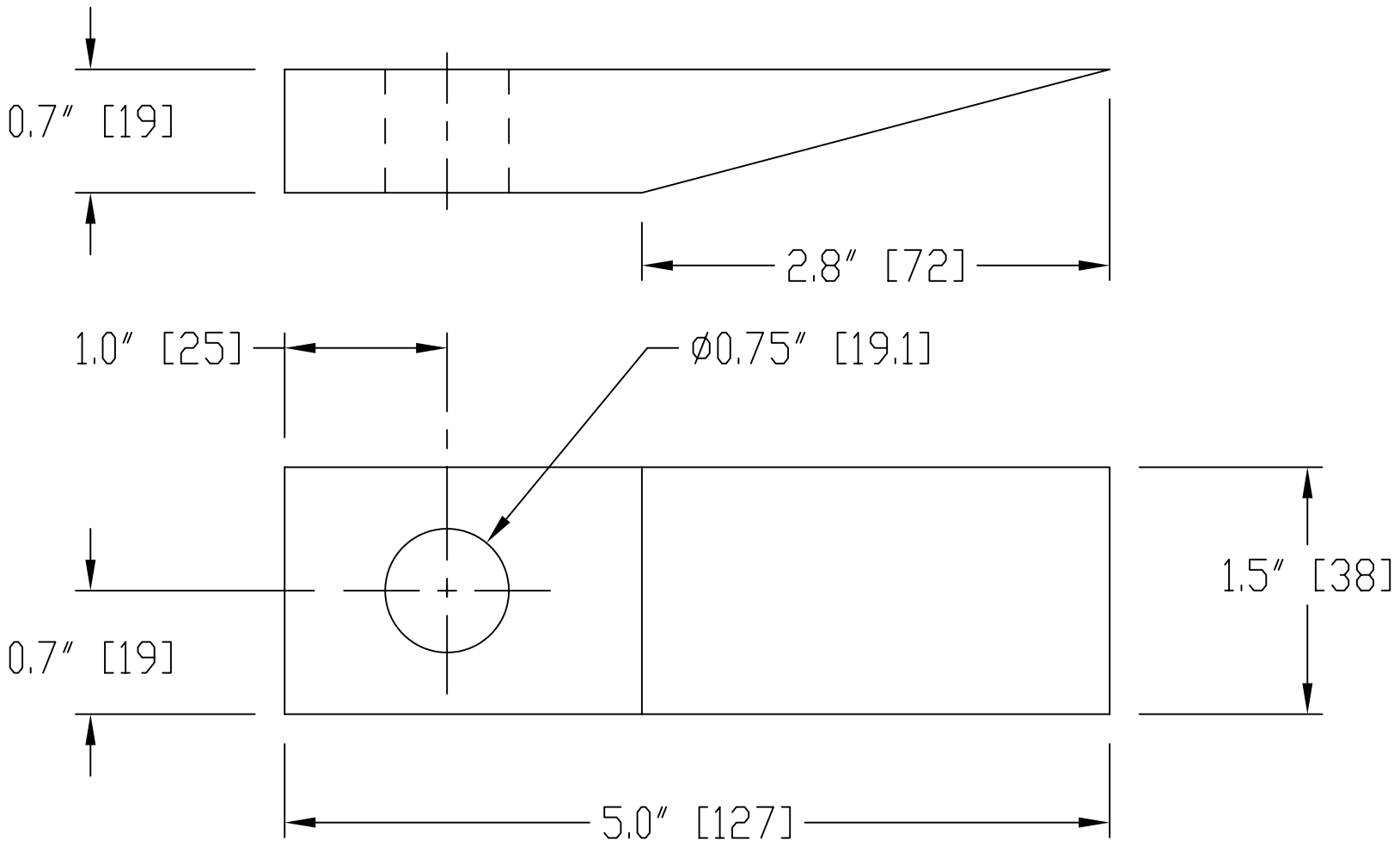

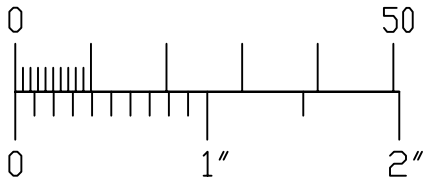

TOLERANCES: UNLESS OTHERWISE SPECIFIED
DECIMAL: ±1.6mm
FRACTIONAL ±1/16″
ANGULAR ±1°

DISCOVER HOVER ONE

© COPYRIGHT, WORLDHOVERCRAFT.ORG, 2004

DWG NAME:	RUDDER BRIDGE LOWER		
SCALE: AS SHOWN	USED ON: 47	ASSEMBLY NAME: DUCT	
MATERIAL:	LOW DENSITY WOOD 5″x 1.5″x 0.75″ [127x38x19]		
DRAWN BY:	M. Shima, D. Oelschlager, J. Schlottman, R. Wilson		
QUANTITY: 1	APPD BY: XXXXX		DWG NO. 19
DATE:	JANUARY 2004		

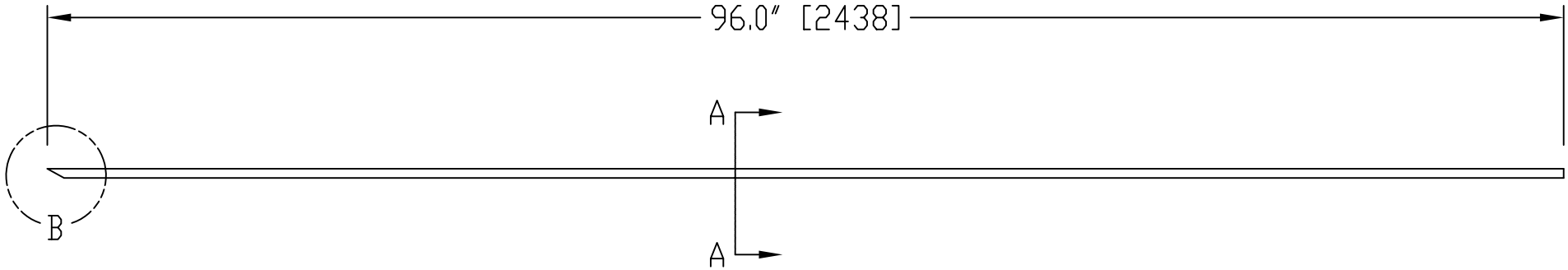

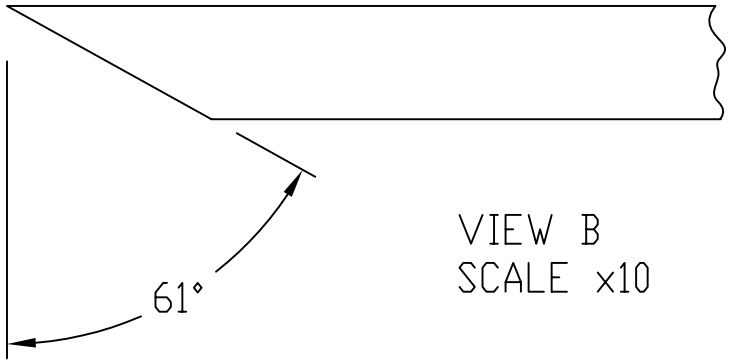

VIEW B
SCALE x10

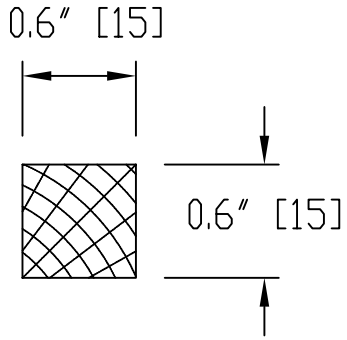

SECTION AA
SCALE x10

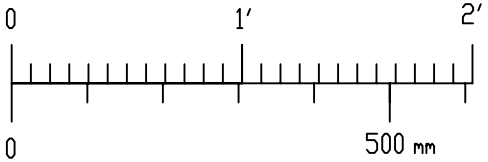

TOLERANCES:
UNLESS OTHERWISE SPECIFIED
DECIMAL: ±3mm
FRACTIONAL ±1/8
ANGULAR ±1°

DISCOVER HOVER ONE

© COPYRIGHT, WORLDHOVERCRAFT.ORG, 2004

DWG NAME:	STRINGER TOP		
SCALE: AS SHOWN	USED ON: 51	ASSEMBLY NAME:	BODY
MATERIAL:	LOW DENSITY WOOD 92.5″x 0.6″x 0.6″ [2350x15x15]		
DRAWN BY:	M. Shima, D. Oelschlager, J. Schlottman, R. Wilson		
QUANTITY: 1	APPD BY: XXXXX		DWG NO. 20
DATE:	MARCH, 2004		

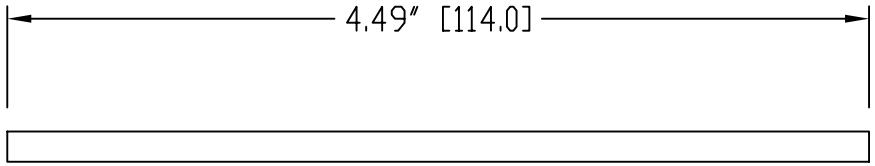

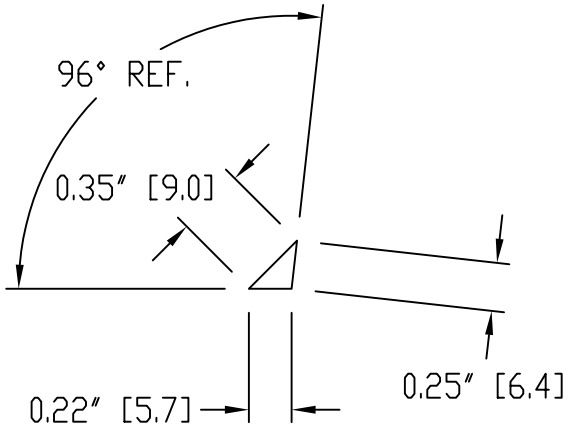

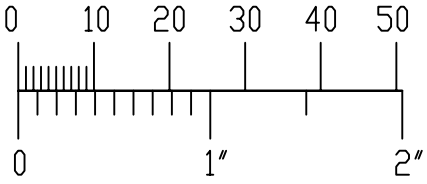

TOLERANCES: UNLESS OTHERWISE SPECIFIED
DECIMAL: ±1.6mm
FRACTIONAL ±1/16″
ANGULAR ±1°

DISCOVER HOVER ONE

© COPYRIGHT, WORLDHOVERCRAFT.ORG, 2004

DWG NAME:	WEDGE		
SCALE: AS SHOWN	USED ON: 49	ASSEMBLY NAME: ENGINE MOUNT SUB	
MATERIAL:	MEDIUM DENSITY WOOD 4.5″x 0.25″x 0.3″ [114x6x7]		
DRAWN BY:	M. Shima, D. Oelschlager, J. Schlottman, R. Wilson		
QUANTITY: 1	APPD BY: XXXXX		DWG NO. 21
DATE:	JANUARY 2004		

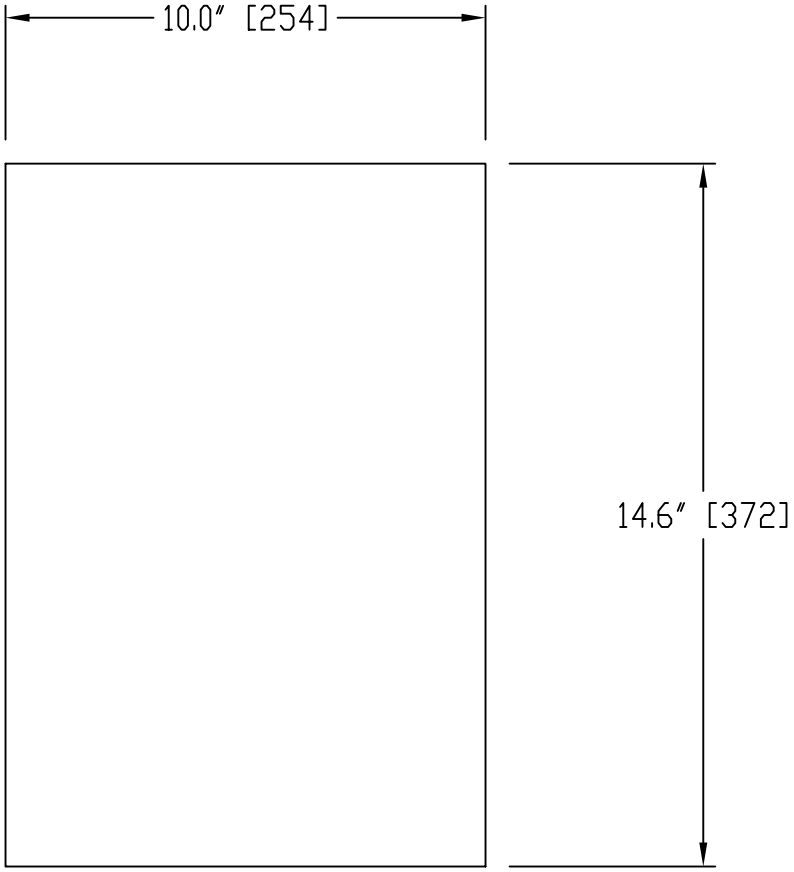

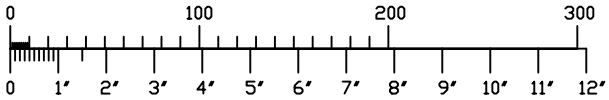

TOLERANCES:
UNLESS
OTHERWISE
SPECIFIED
DECIMAL:
±3mm
FRACTIONAL
±1/8
ANGULAR
±1°

DISCOVER HOVER ONE

© COPYRIGHT, WORLDHOVERCRAFT.ORG, 2004

DWG NAME:	SEAT BACK		
SCALE: AS SHOWN	USED ON: 51	ASSEMBLY NAME: BODY	
MATERIAL:	1/8″ [3mm] PLYWOOD 14.6″x 10″ [372x254]		
DRAWN BY:	M. Shima, D. Oelschlager, J. Schlottman, R. Wilson		
QUANTITY: 1	APPD BY: XXXXX	DWG NO. 22	
DATE:	JANUARY 2004		

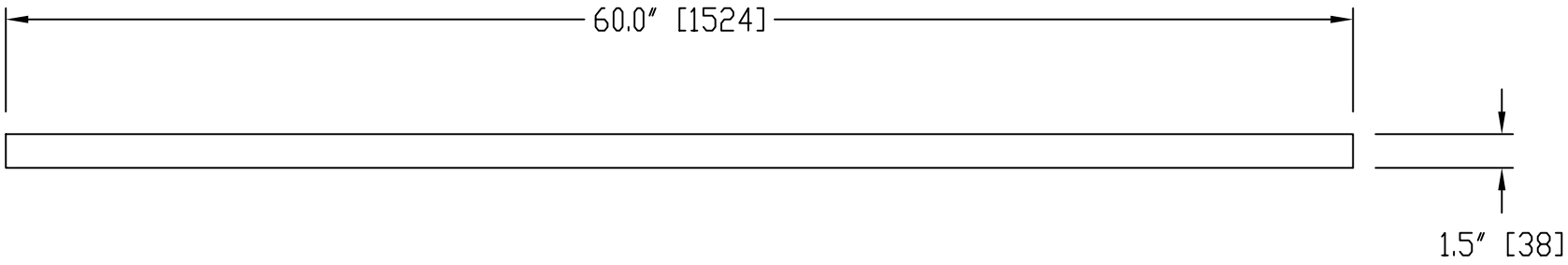

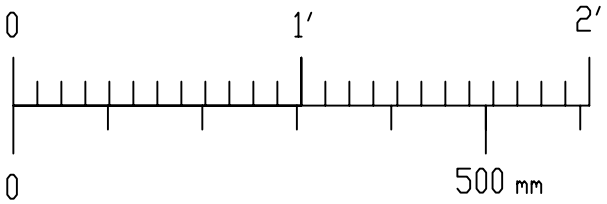

TOLERANCES:
UNLESS
OTHERWISE
SPECIFIED
DECIMAL:
±3mm
FRACTIONAL
±1/8
ANGULAR
±1°

DISCOVER HOVER ONE

© COPYRIGHT, WORLDHOVERCRAFT.ORG, 2004

DWG NAME:	SKIRT ATTACHMENT STRIP F/R		
SCALE: AS SHOWN	USED ON: 50	ASSEMBLY NAME: HULL	
MATERIAL: 1/4″ [6mm] PLYWOOD 60″x 1.5″ [1524x38]			
DRAWN BY: M. Shima, D. Oelschlager, J. Schlottman, R. Wilson			
QUANTITY: 1	APPD BY: XXXXX	DWG NO. 23	
DATE: JANUARY 2004			

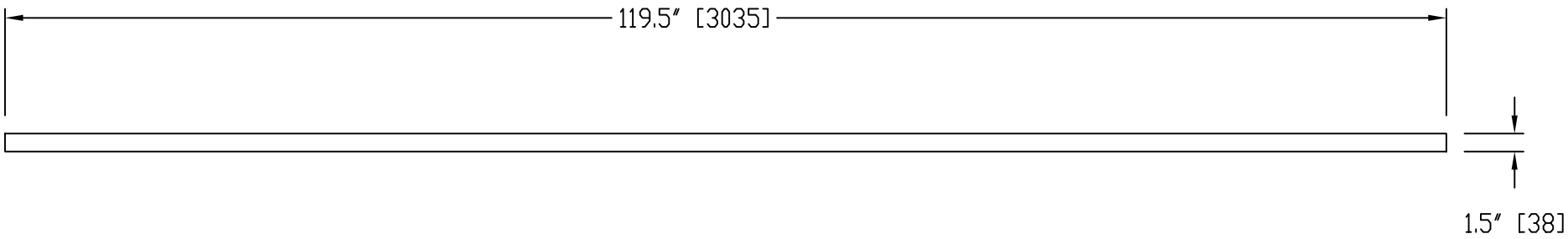

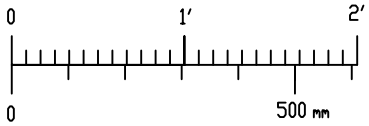

TOLERANCES:
UNLESS
OTHERWISE
SPECIFIED
DECIMAL:
±3mm
FRACTIONAL
±1/8
ANGULAR
±1°

DISCOVER HOVER ONE

© COPYRIGHT, WORLDHOVERCRAFT.ORG, 2004

DWG NAME:	SKIRT ATTACHMENT STRIP SIDE		
SCALE: AS SHOWN	USED ON: 50	ASSEMBLY NAME: HULL	
MATERIAL: 1/4″ [6mm] PLYWOOD 119.5″x 1.5″ [3035x38]			
DRAWN BY: M. Shima, D. Oelschlager, J. Schlottman, R. Wilson			
QUANTITY: 1	APPD BY: XXXXX	DWG NO. 24	
DATE: JANUARY 2004			

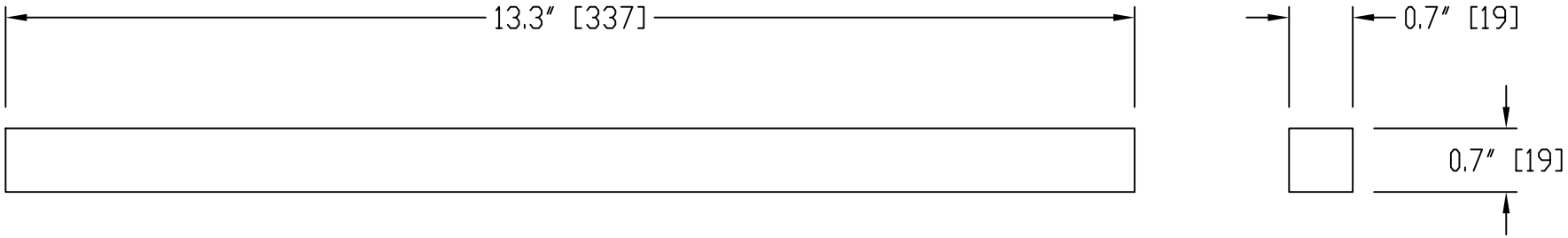

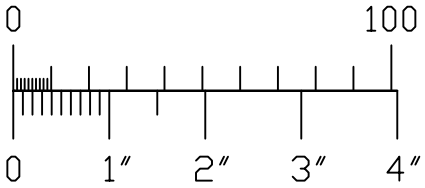

TOLERANCES:
UNLESS
OTHERWISE
SPECIFIED
DECIMAL:
±3mm
FRACTIONAL
±1/8
ANGULAR
±1°

DISCOVER HOVER ONE

© COPYRIGHT, WORLDHOVERCRAFT.ORG, 2004

DWG NAME:	SUPPORT		
SCALE: AS SHOWN	USED ON: 51	ASSEMBLY NAME:	BODY
MATERIAL:	LOW DENSITY WOOD 13.3″x 0.75″x 0.75″ [337x19x19]		
DRAWN BY:	M. Shima, D. Oelschlager, J. Schlottman, R. Wilson		
QUANTITY: 1	APPD BY: XXXXX		DWG NO. 25
DATE:	JANUARY 2004		

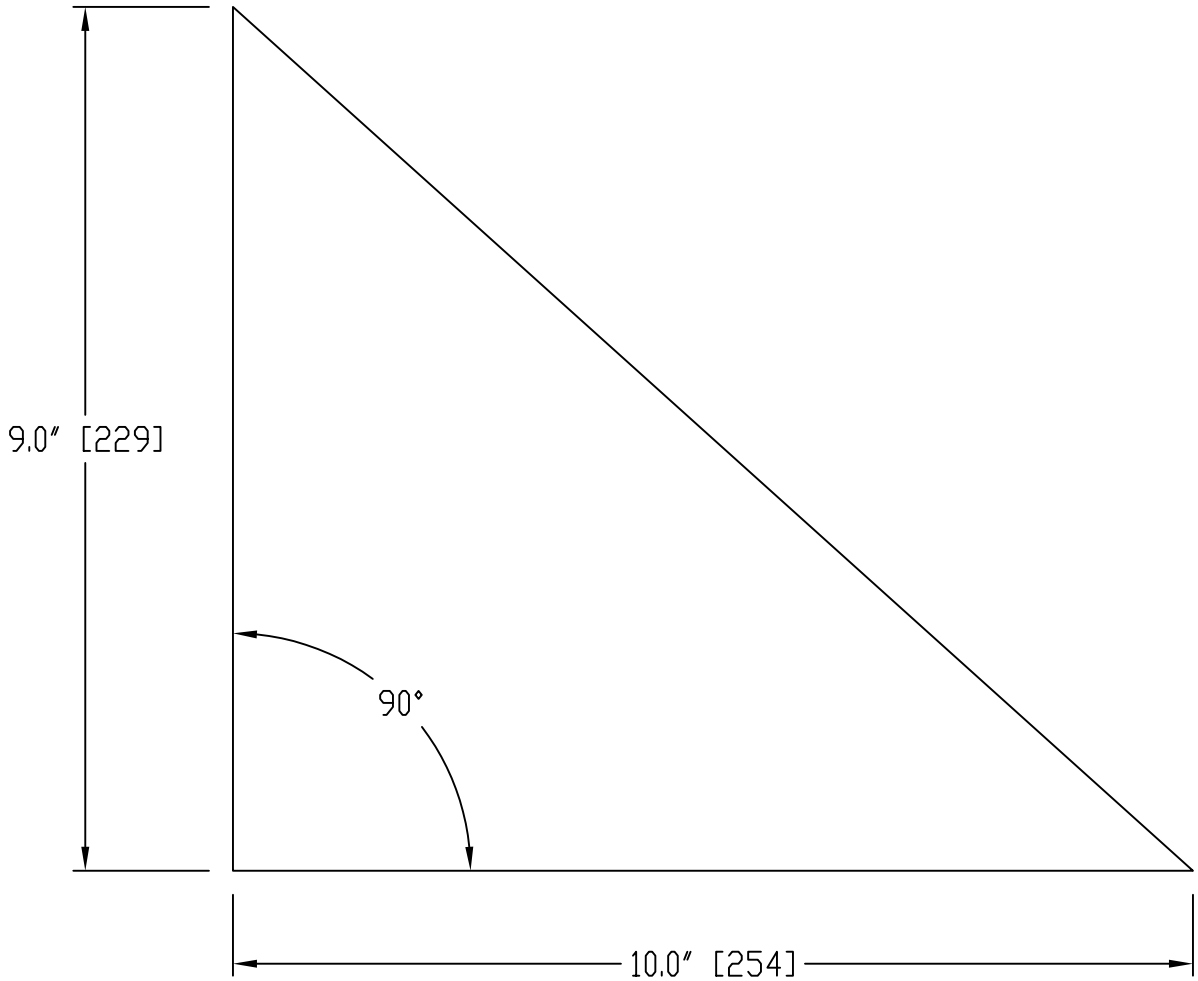

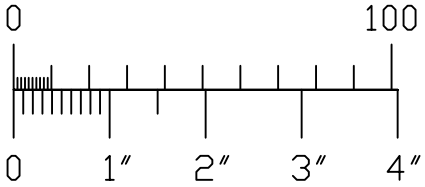

TOLERANCES:
UNLESS
OTHERWISE
SPECIFIED
DECIMAL:
±3mm
FRACTIONAL
±1/8
ANGULAR
±1°

DISCOVER HOVER ONE

© COPYRIGHT, WORLDHOVERCRAFT.ORG, 2004

DWG NAME:	AIRBOX INFILL		
SCALE: AS SHOWN	USED ON: 48	ASSEMBLY NAME: DUCT	
MATERIAL:	1/8″ [3mm] LOW DENSITY PLYWOOD 10″x 9″ [254x229]		
DRAWN BY:	M. Shima, D. Oelschlager, J. Schlottman, R. Wilson		
QUANTITY: 1	APPD BY: XXXXX	DWG NO. 26	
DATE:	JANUARY 2004		

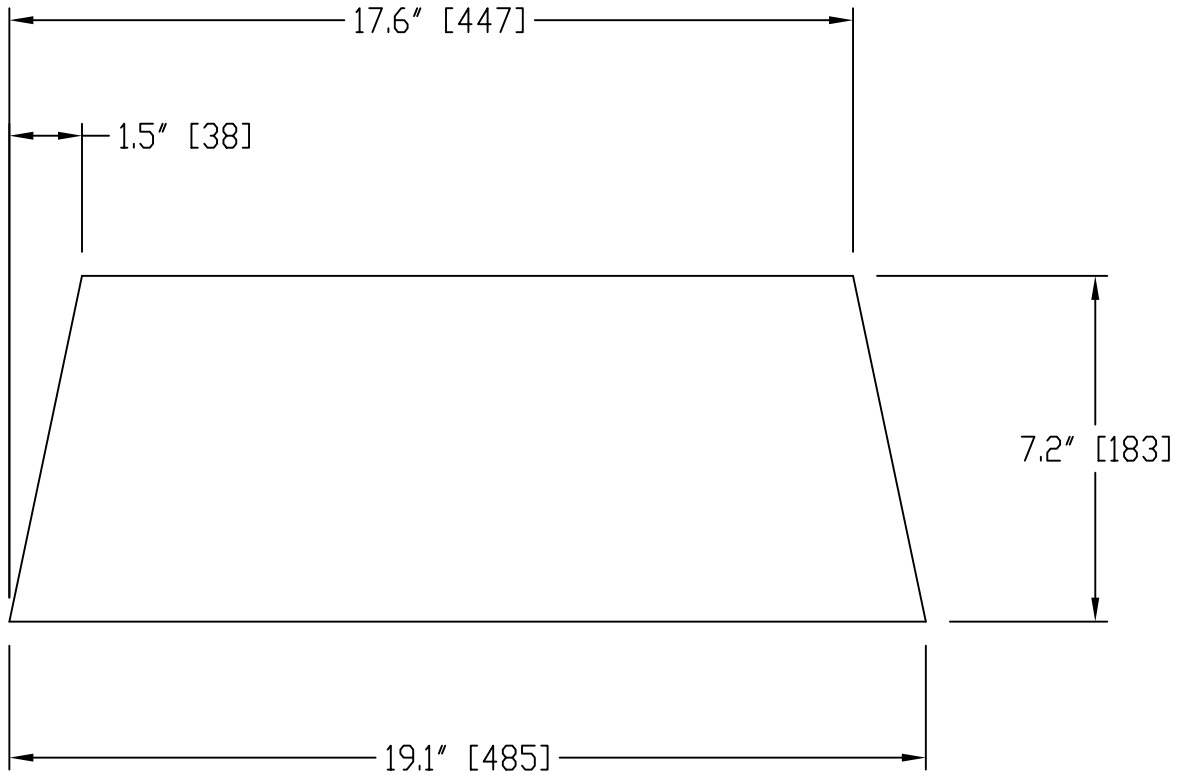

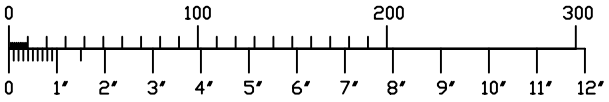

TOLERANCES:
UNLESS
OTHERWISE
SPECIFIED
DECIMAL:
±3mm
FRACTIONAL
±1/8
ANGULAR
±1°

DISCOVER HOVER ONE

© COPYRIGHT, WORLDHOVERCRAFT.ORG, 2004

DWG NAME:	FRONT INFILL		
SCALE: AS SHOWN	USED ON: 51	ASSEMBLY NAME: BODY	
MATERIAL: 1/8″ [3mm] PLYWOOD 19.1″x 7.3″ [485x184]			
DRAWN BY: M. Shima, D. Oelschlager, J. Schlottman, R. Wilson			
QUANTITY: 1	APPD BY: XXXXX	DWG NO. 27	
DATE: JANUARY 2004			

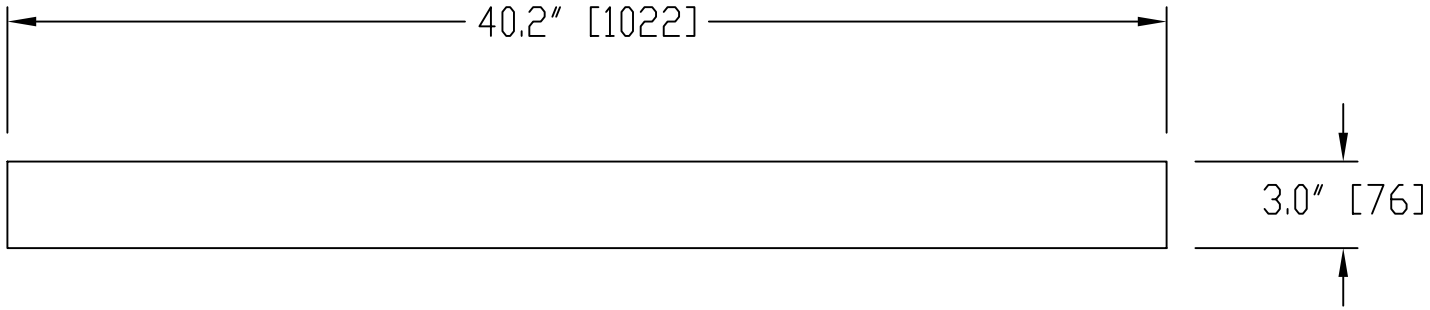

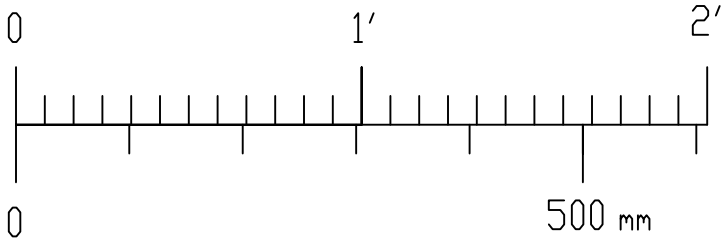

TOLERANCES:
UNLESS
OTHERWISE
SPECIFIED
DECIMAL:
±3mm
FRACTIONAL
±1/8
ANGULAR
±1°

DISCOVER HOVER ONE

© COPYRIGHT, WORLDHOVERCRAFT.ORG, 2004

DWG NAME:	SKID MOUNT FRONT		
SCALE: AS SHOWN	USED ON: 50	ASSEMBLY NAME: HULL	
MATERIAL: 1/8″ [3mm] PLYWOOD 40.25″x 3.0″ [1022x76]			
DRAWN BY: M. Shima, D. Oelschlager, J. Schlottman, R. Wilson			
QUANTITY: 1	APPD BY: XXXXX	DWG NO. 28	
DATE: JANUARY 2004			

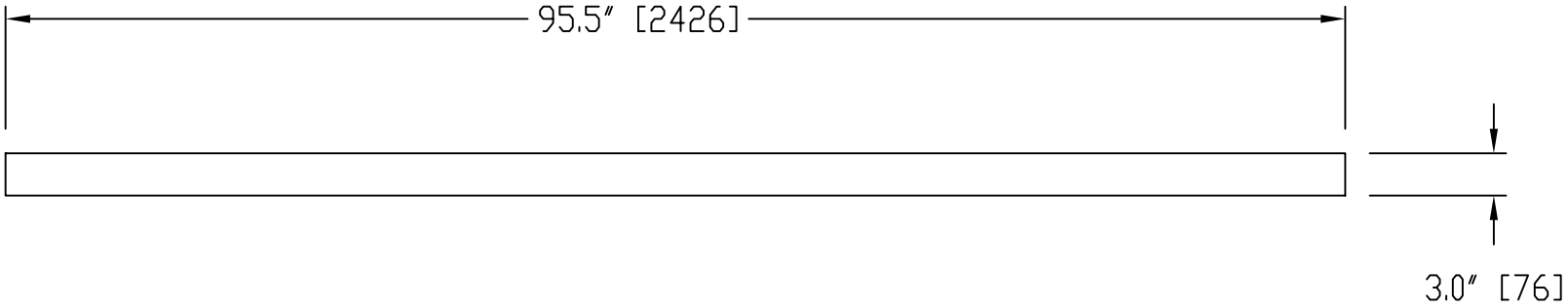

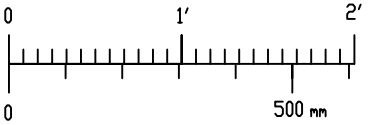

TOLERANCES:
UNLESS
OTHERWISE
SPECIFIED
DECIMAL:
±3mm
FRACTIONAL
±1/8
ANGULAR
±1°

DISCOVER HOVER ONE

© COPYRIGHT, WORLDHOVERCRAFT.ORG, 2004

DWG NAME:	SKID MOUNT SIDE		
SCALE: AS SHOWN	USED ON: 50	ASSEMBLY NAME:	HULL
MATERIAL:	1/8″ [3mm] PLYWOOD 95.5″x 3.0″ [2426x76]		
DRAWN BY:	M. Shima, D. Oelschlager, J. Schlottman, R. Wilson		
QUANTITY: 1	APPD BY:	XXXXX	DWG NO. 29
DATE:	JANUARY 2004		

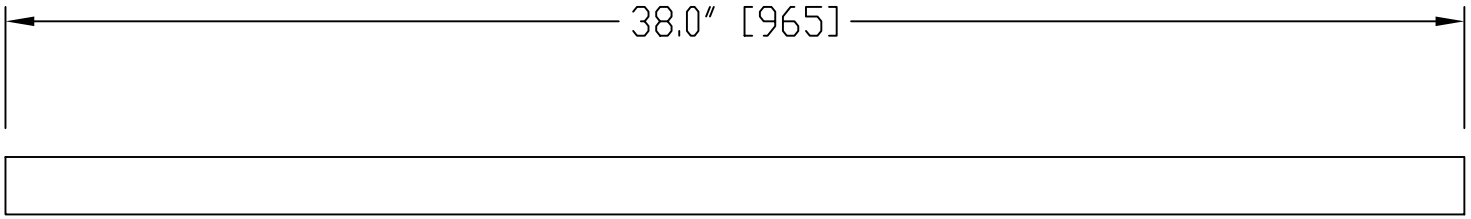

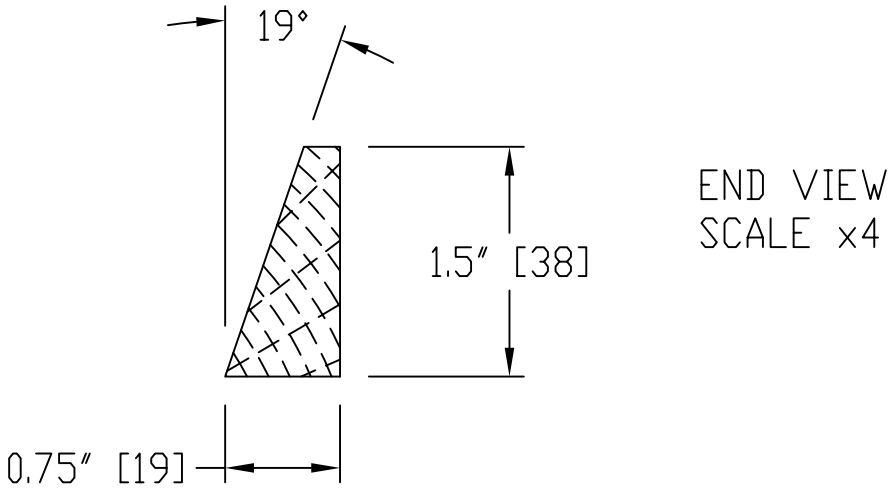

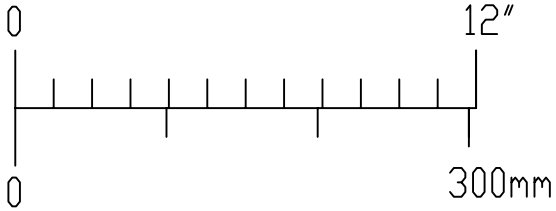

TOLERANCES:
UNLESS OTHERWISE SPECIFIED
DECIMAL: ±3mm
FRACTIONAL ±1/8
ANGULAR ±1°

DISCOVER HOVER ONE

© COPYRIGHT, WORLDHOVERCRAFT.ORG, 2004

DWG NAME:	SKIRT MOUNT FRONT		
SCALE: AS SHOWN	USED ON: 50	ASSEMBLY NAME: HULL	
MATERIAL:	LOW DENSITY WOOD 38″x 1.5″x 0.75″ [965x38x19]		
DRAWN BY:	M. Shima, D. Oelschlager, J. Schlottman, R. Wilson		
QUANTITY: 1	APPD BY: XXXXX		DWG NO. 30
DATE:	JANUARY 2004		

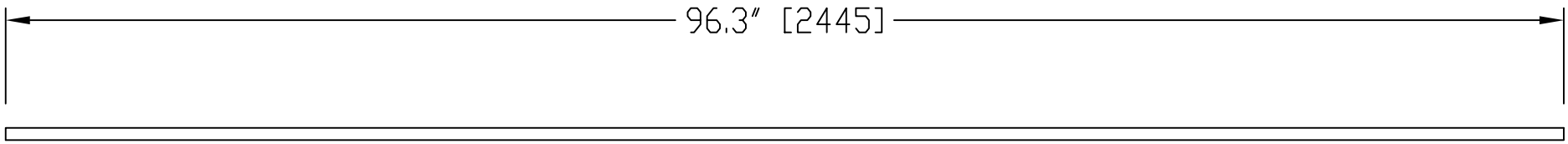

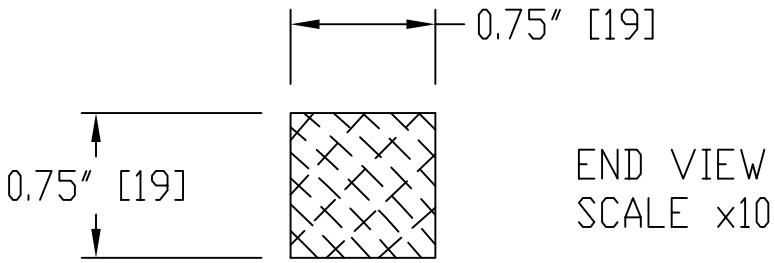

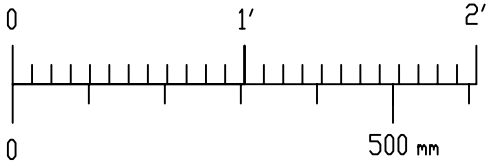

TOLERANCES:
UNLESS OTHERWISE SPECIFIED
DECIMAL: ±3mm
FRACTIONAL ±1/8
ANGULAR ±1°

DISCOVER HOVER ONE

© COPYRIGHT, WORLDHOVERCRAFT.ORG, 2004

DWG NAME:	SKIRT MOUNT SIDES		
SCALE: AS SHOWN	USED ON: 50	ASSEMBLY NAME: HULL	
MATERIAL:	LOW DENSITY WOOD 96.3″x 0.75″x 0.75″ [2445x19x19]		
DRAWN BY:	M. Shima, D. Oelschlager, J. Schlottman, R. Wilson		
QUANTITY: 1	APPD BY: XXXXX		DWG NO. 31
DATE:	JANUARY 2004		

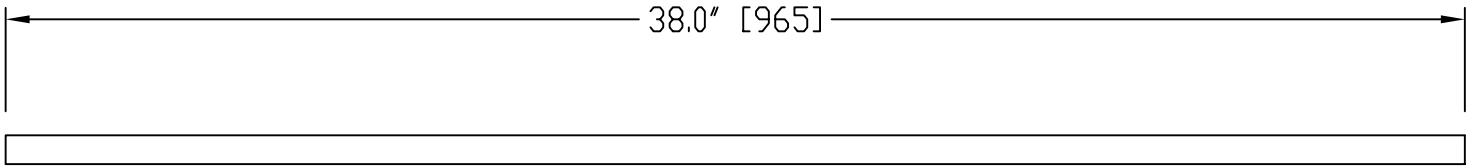

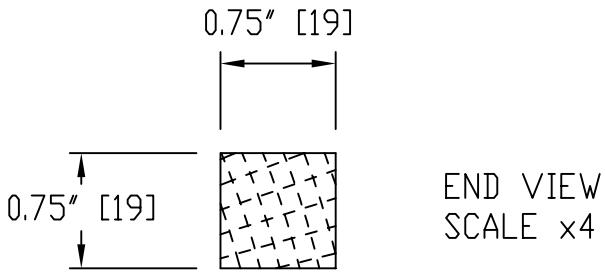

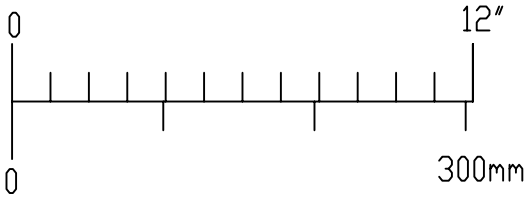

TOLERANCES:
UNLESS OTHERWISE SPECIFIED
DECIMAL: ±3mm
FRACTIONAL ±1/8
ANGULAR ±1°

DISCOVER HOVER ONE

© COPYRIGHT, WORLDHOVERCRAFT.ORG, 2004

DWG NAME:	SKIRT MOUNT REAR		
SCALE: AS SHOWN	USED ON: 50	ASSEMBLY NAME: HULL	
MATERIAL:	LOW DENSITY WOOD 38″x 0.75″x 0.75″ [965x19x19]		
DRAWN BY:	M. Shima, D. Oelschlager, J. Schlottman, R. Wilson		
QUANTITY: 1	APPD BY: XXXXX		DWG NO. 32
DATE:	JANUARY 2004		

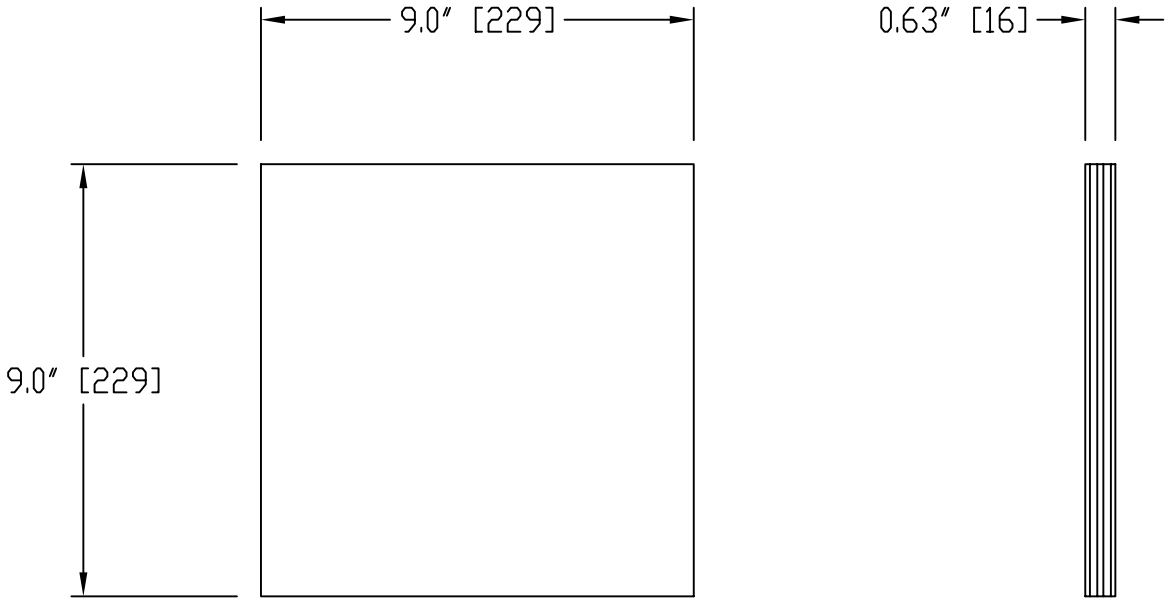

NOTE- 5 LAMINATIONS OF 1/8″ [3mm] PLYWOOD
GLUE LAMINATES WITH EPOXY
(USE PRESS OR WEIGHT TO CLAMP)

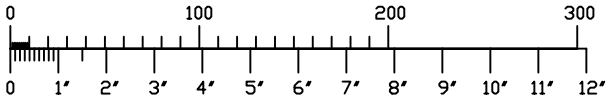

TOLERANCES:
UNLESS
OTHERWISE
SPECIFIED
DECIMAL:
±3mm
FRACTIONAL
±1/8
ANGULAR
±1°

DISCOVER HOVER ONE

© COPYRIGHT, WORLDHOVERCRAFT.ORG, 2004

DWG NAME:	ENGINE MOUNT		
SCALE: AS SHOWN	USED ON: 49	ASSEMBLY NAME: ENGINE MOUNT SUB	
MATERIAL: 5/8″ [16mm] PLYWOOD 9″x 9″ [229x229]			
DRAWN BY: M. Shima, D. Oelschlager, J. Schlottman, R. Wilson			
QUANTITY: 1	APPD BY: XXXXX		DWG NO. 33
DATE: JANUARY 2004			

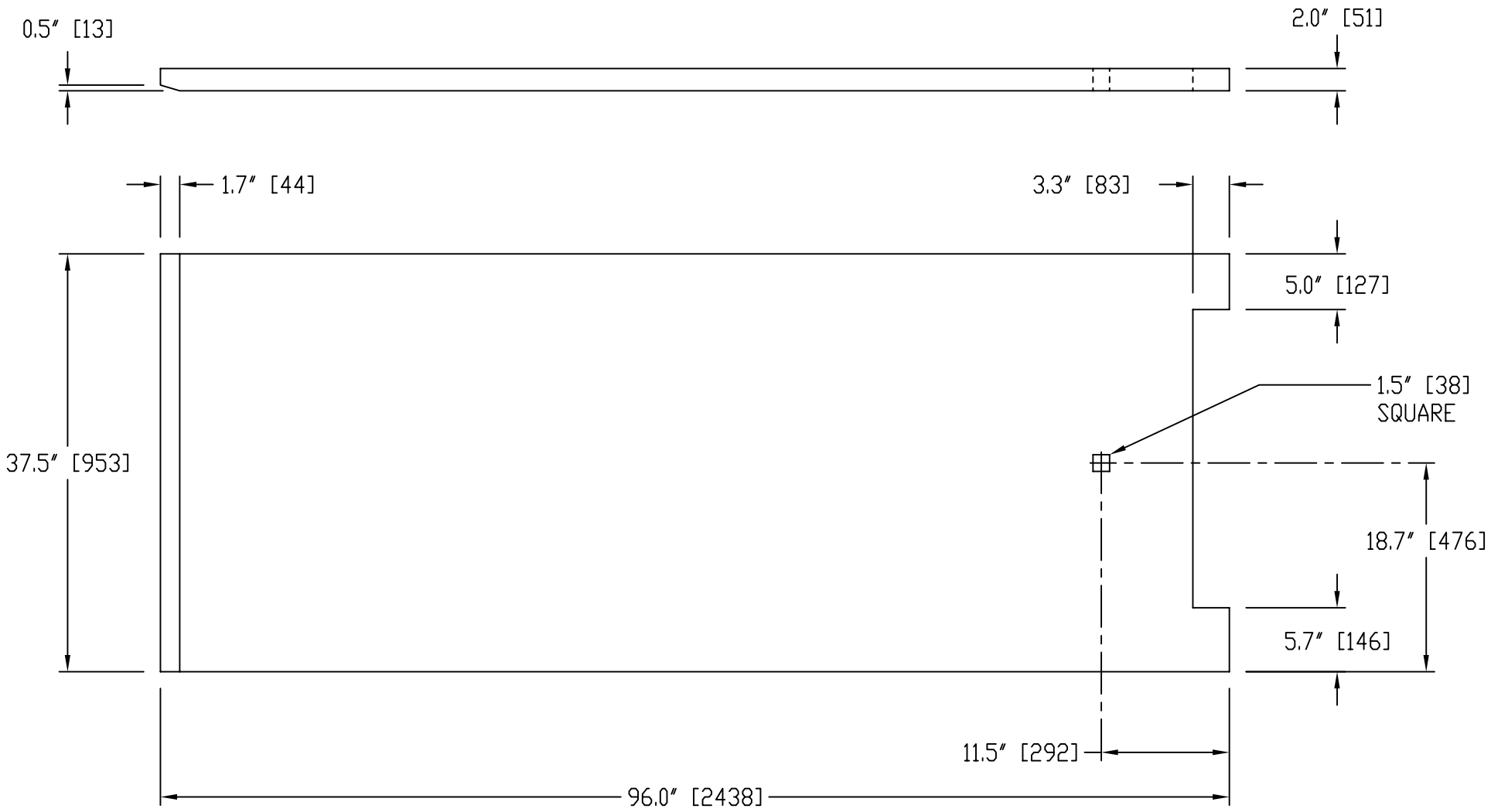

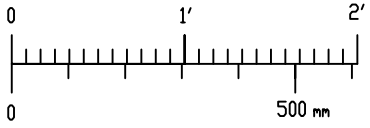

TOLERANCES:
UNLESS OTHERWISE SPECIFIED
DECIMAL: ±3mm
FRACTIONAL ±1/8
ANGULAR ±1°

DISCOVER HOVER ONE

© COPYRIGHT, WORLDHOVERCRAFT.ORG, 2004

DWG NAME:	HULL FOAM BLOCK 1		
SCALE: AS SHOWN	USED ON: 50	ASSEMBLY NAME: HULL	
MATERIAL:	POLYSTYRENE FOAM 96″x 37.5″x 2″ [2438x953x51]		
DRAWN BY:	M. Shima, D. Oelschlager, J. Schlottman, R. Wilson		
QUANTITY: 1	APPD BY: XXXXX		DWG NO. 34
DATE:	JANUARY 2004		

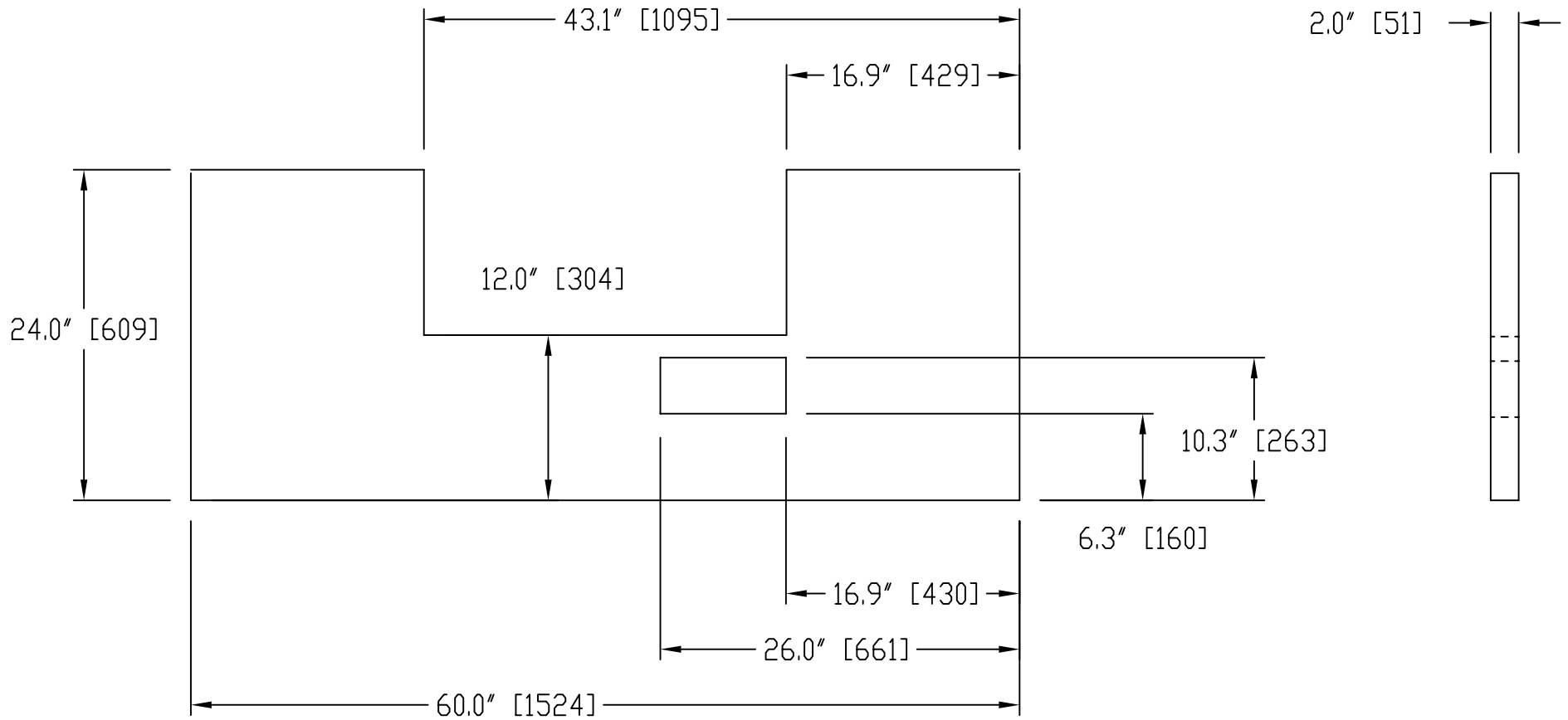

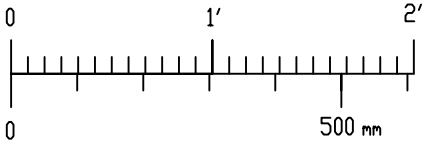

TOLERANCES: UNLESS OTHERWISE SPECIFIED
DECIMAL: ±3mm
FRACTIONAL ±1/8
ANGULAR ±1°

DISCOVER HOVER ONE

© COPYRIGHT, WORLDHOVERCRAFT.ORG, 2004

DWG NAME:	HULL FOAM BLOCK 4		
SCALE: AS SHOWN	USED ON: 50	ASSEMBLY NAME:	HULL
MATERIAL:	POLYSTYRENE FOAM 59.5″x 23.5″x 2″ [1511x597x51]		
DRAWN BY:	M. Shima, D. Oelschlager, J. Schlottman, R. Wilson		
QUANTITY: 1	APPD BY: XXXXX		DWG NO. 35
DATE:	JANUARY 2004		

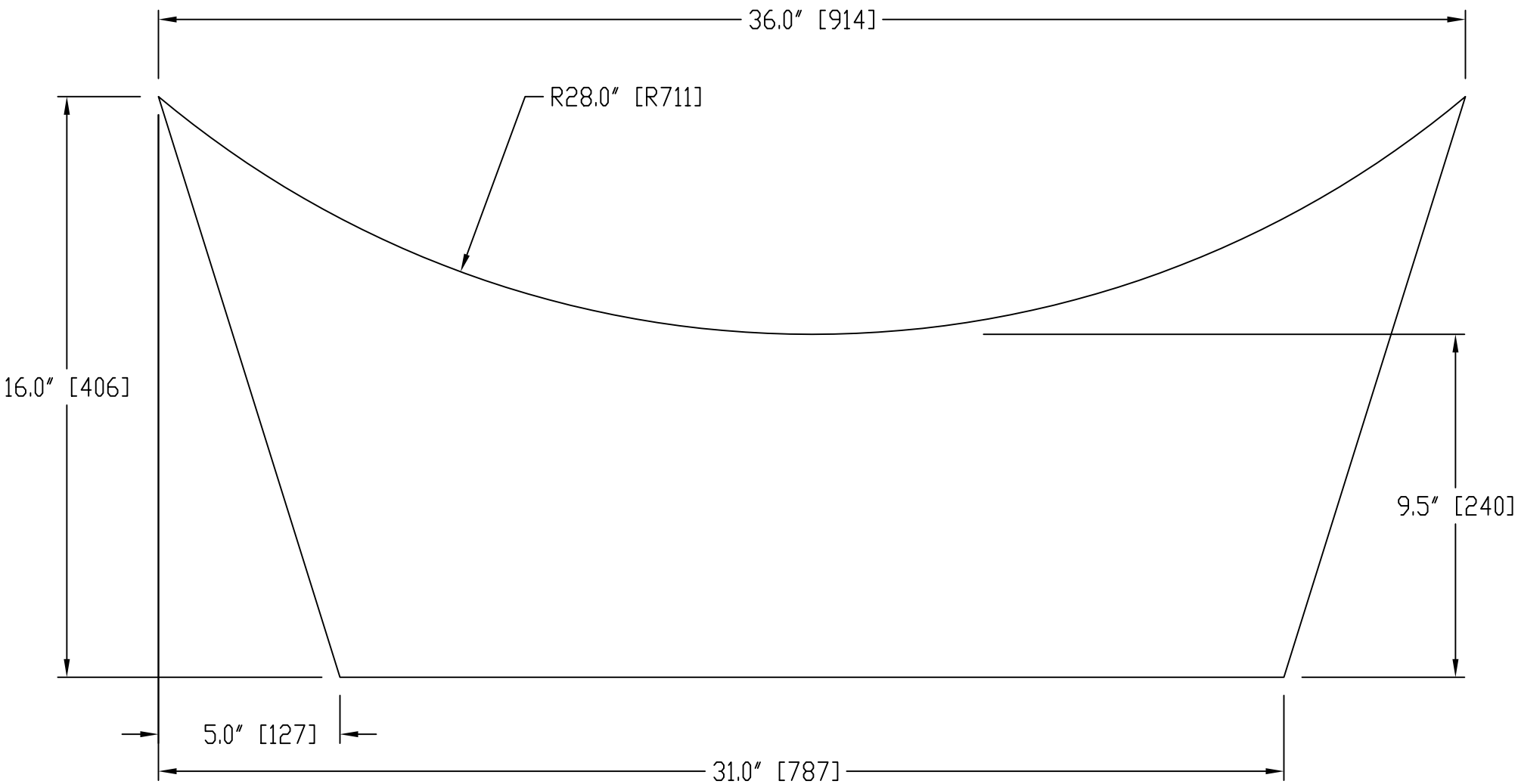

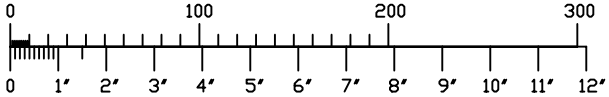

TOLERANCES:
UNLESS
OTHERWISE
SPECIFIED
DECIMAL:
±3mm
FRACTIONAL
±1/8
ANGULAR
±1°

DISCOVER HOVER ONE

© COPYRIGHT, WORLDHOVERCRAFT.ORG, 2004

DWG NAME:	AIRBOX BACK		
SCALE: AS SHOWN	USED ON: 48	ASSEMBLY NAME: DUCT	
MATERIAL: 1/8″ [3mm] PLYWOOD 36″x 16″ [914x406]			
DRAWN BY: M. Shima, D. Oelschlager, J. Schlottman, R. Wilson			
QUANTITY: 1	APPD BY: XXXXX	DWG NO. 36	
DATE: JANUARY 2004			

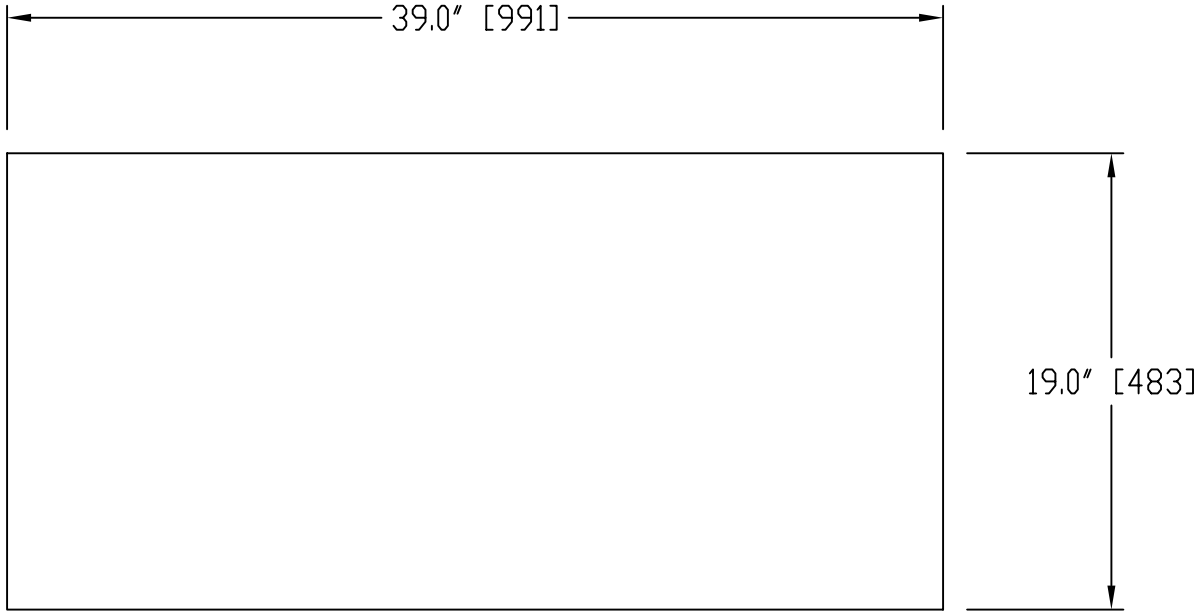

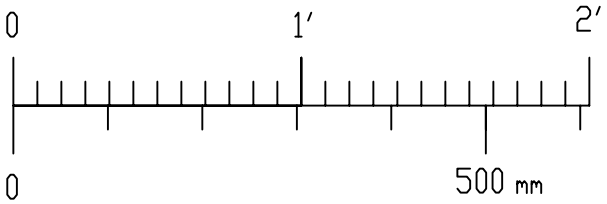

TOLERANCES:
UNLESS
OTHERWISE
SPECIFIED
DECIMAL:
±3mm
FRACTIONAL
±1/8
ANGULAR
±1°

DISCOVER HOVER ONE

© COPYRIGHT, WORLDHOVERCRAFT.ORG, 2004

DWG NAME:	AIRBOX TOP		
SCALE: AS SHOWN	USED ON: 48	ASSEMBLY NAME:	DUCT
MATERIAL:	1/8″ [3mm] PLYWOOD 40″x 19″ [1016x483]		
DRAWN BY:	M. Shima, D. Oelschlager, J. Schlottman, R. Wilson		
QUANTITY: 1	APPD BY: XXXXX	DWG NO.	37
DATE:	JANUARY 2004		

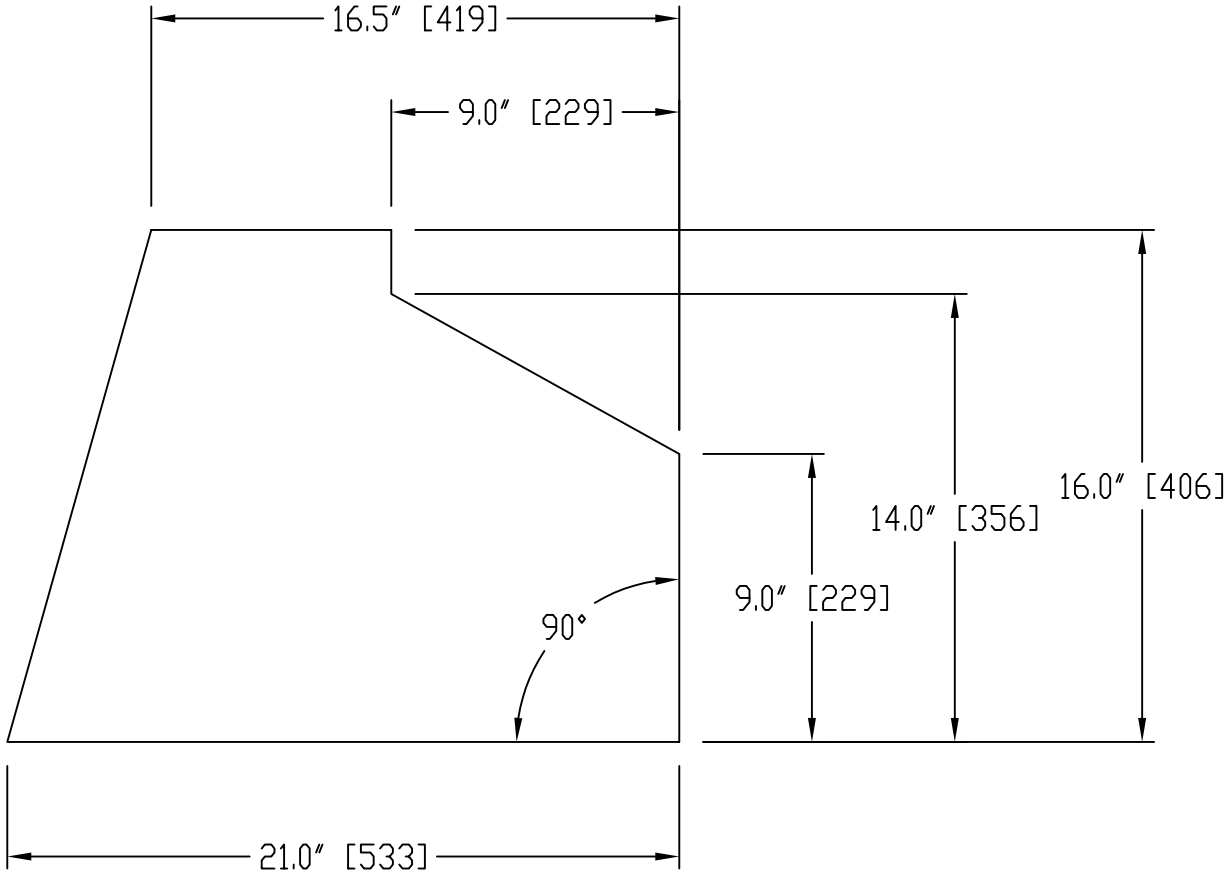

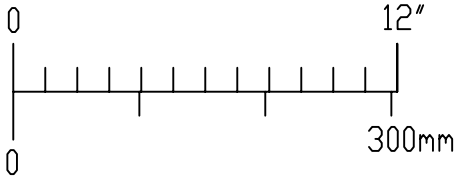

TOLERANCES:
UNLESS OTHERWISE SPECIFIED
DECIMAL: ±3mm
FRACTIONAL ±1/8
ANGULAR ±1°

DISCOVER HOVER ONE

© COPYRIGHT, WORLDHOVERCRAFT.ORG, 2004

DWG NAME:	AIRBOX SIDES		
SCALE: AS SHOWN	USED ON: 48	ASSEMBLY NAME: DUCT	
MATERIAL: 1/8″ [3mm] PLYWOOD 21″x 16″ [533x406]			
DRAWN BY: M. Shima, D. Oelschlager, J. Schlottman, R. Wilson			
QUANTITY: 1	APPD BY: XXXXX		DWG NO. 38
DATE: JANUARY 2004			

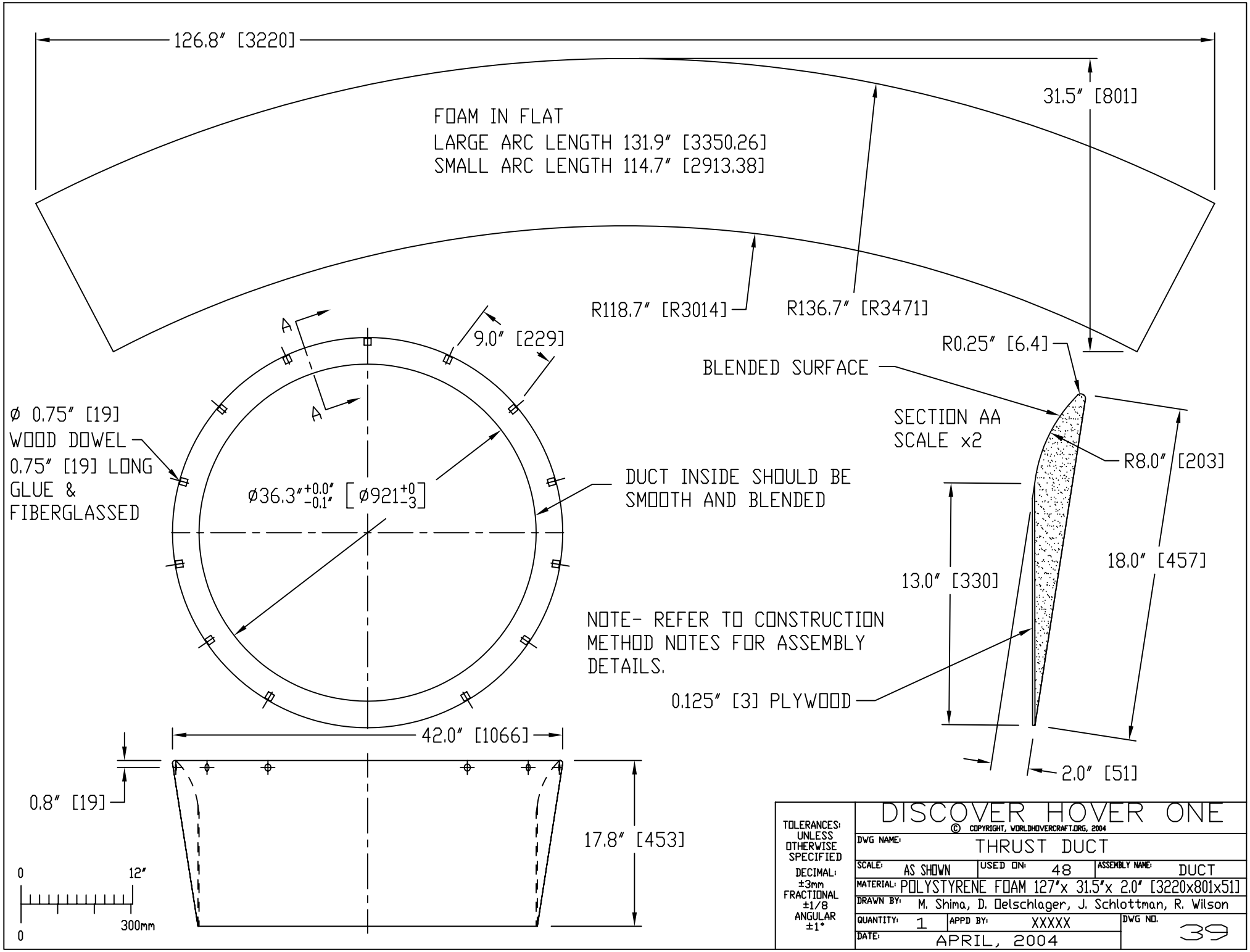
126.8″ [3220]
31.5″ [801]
FOAM IN FLAT
LARGE ARC LENGTH 131.9″ [3350.26]
SMALL ARC LENGTH 114.7″ [2913.38]
R118.7″ [R3014]
R136.7″ [R3471]
A
A
9.0″ [229]
ø 0.75″ [19]
WOOD DOWEL
0.75″ [19] LONG
GLUE &
FIBERGLASSED
ø36.3″ +0.0″ −0.1″ [ø921 +0 −3]
DUCT INSIDE SHOULD BE
SMOOTH AND BLENDED
R0.25″ [6.4]
BLENDED SURFACE
SECTION AA
SCALE x2
R8.0″ [203]
13.0″ [330]
18.0″ [457]
NOTE- REFER TO CONSTRUCTION
METHOD NOTES FOR ASSEMBLY
DETAILS.
0.125″ [3] PLYWOOD
2.0″ [51]
42.0″ [1066]
0.8″ [19]
17.8″ [453]
0
12″
0
300mm
TOLERANCES: UNLESS OTHERWISE SPECIFIED
DECIMAL: ±3mm
FRACTIONAL ±1/8
ANGULAR ±1°
DISCOVER HOVER ONE
© COPYRIGHT, WORLDHOVERCRAFT.ORG, 2004
DWG NAME: THRUST DUCT
SCALE: AS SHOWN
USED ON: 48
ASSEMBLY NAME: DUCT
MATERIAL: POLYSTYRENE FOAM 127″x 31.5″x 2.0″ [3220x801x51]
DRAWN BY: M. Shima, D. Oelschlager, J. Schlottman, R. Wilson
QUANTITY: 1
APPD BY: XXXXX
DWG NO. 39
DATE: APRIL, 2004

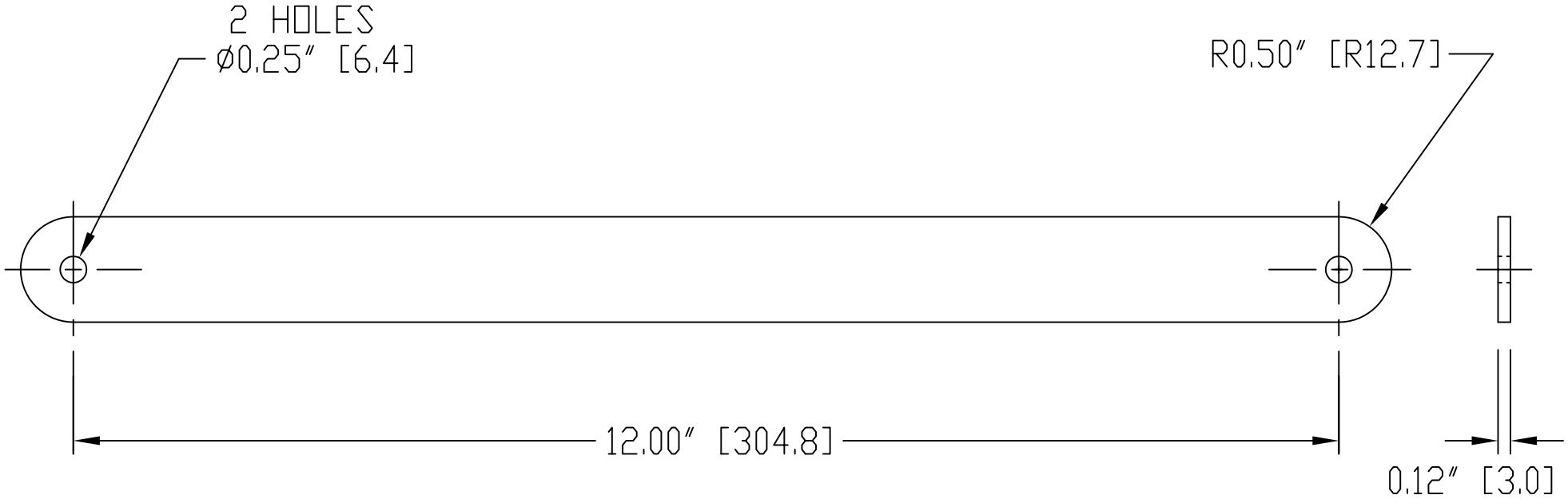

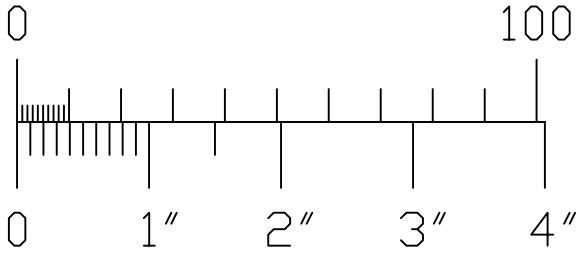

TOLERANCES:
UNLESS OTHERWISE SPECIFIED
DECIMAL: ±1mm
FRACTIONAL ±1/32″
ANGULAR ±1°

DISCOVER HOVER ONE

© COPYRIGHT, WORLDHOVERCRAFT.ORG, 2004

DWG NAME:	RUDDER TIE BAR		
SCALE: AS SHOWN	USED ON: 47	ASSEMBLY NAME: RUDDER	
MATERIAL:	ALUMINUM 13″x 1″x 1/8″ [330x25x3]		
DRAWN BY:	M. Shima, D. Oelschlager, J. Schlottman, R. Wilson		
QUANTITY: 1	APPD BY: XXXXX		DWG NO. 40
DATE:	JANUARY 2004		

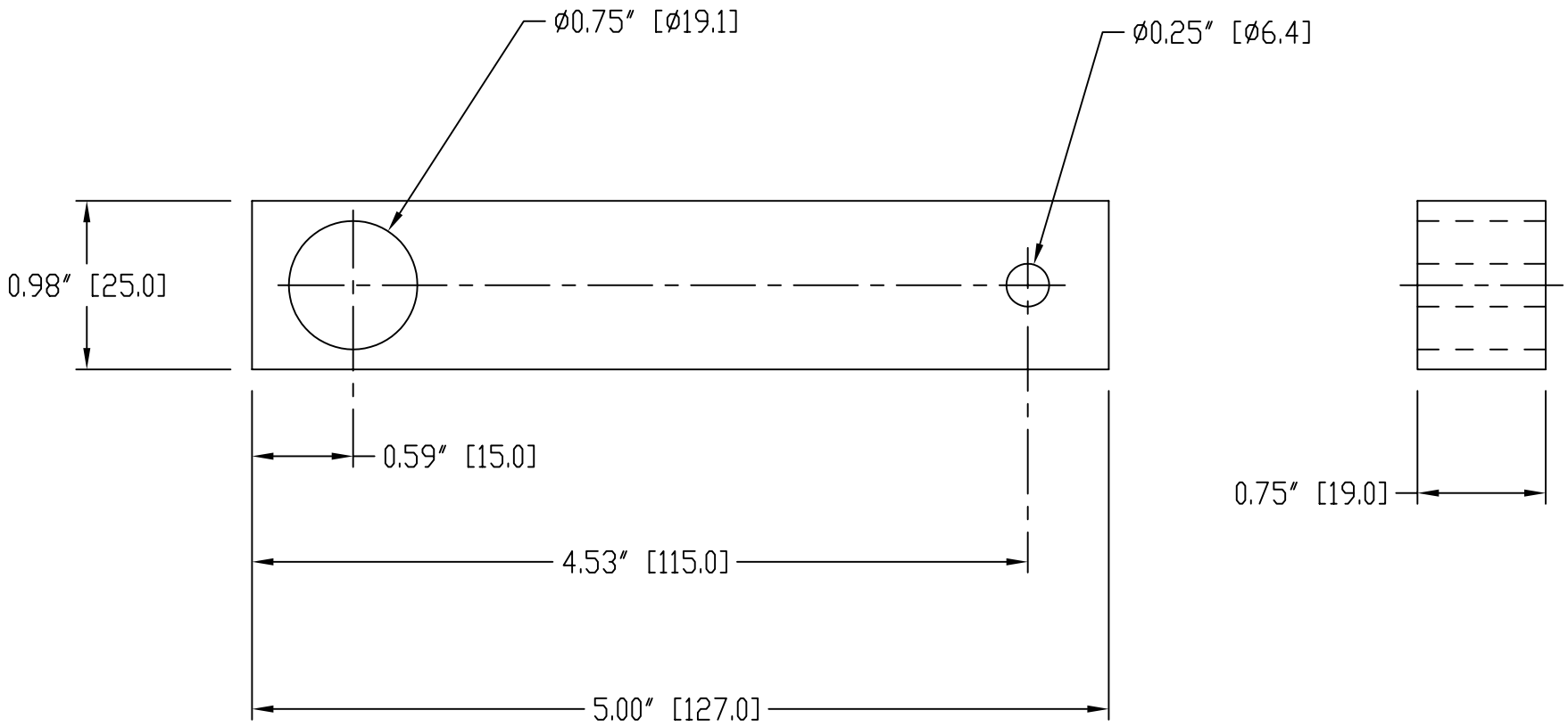

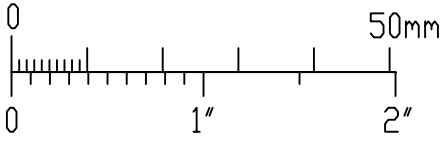

TOLERANCES: UNLESS OTHERWISE SPECIFIED
DECIMAL: ±1mm
FRACTIONAL ±1/32″
ANGULAR ±1°

DISCOVER HOVER ONE

© COPYRIGHT, WORLDHOVERCRAFT.ORG, 2004

DWG NAME:	RUDDER ARM		
SCALE: AS SHOWN	USED ON: 47	ASSEMBLY NAME: RUDDER	
MATERIAL:	MEDIUM DENSITY WOOD 5″x 1″x 3/4″ [127x25x19]		
DRAWN BY:	M. Shima, D. Oelschlager, J. Schlottman, R. Wilson		
QUANTITY: 1	APPD BY: XXXXX		DWG NO. 41
DATE:	JANUARY 2004		

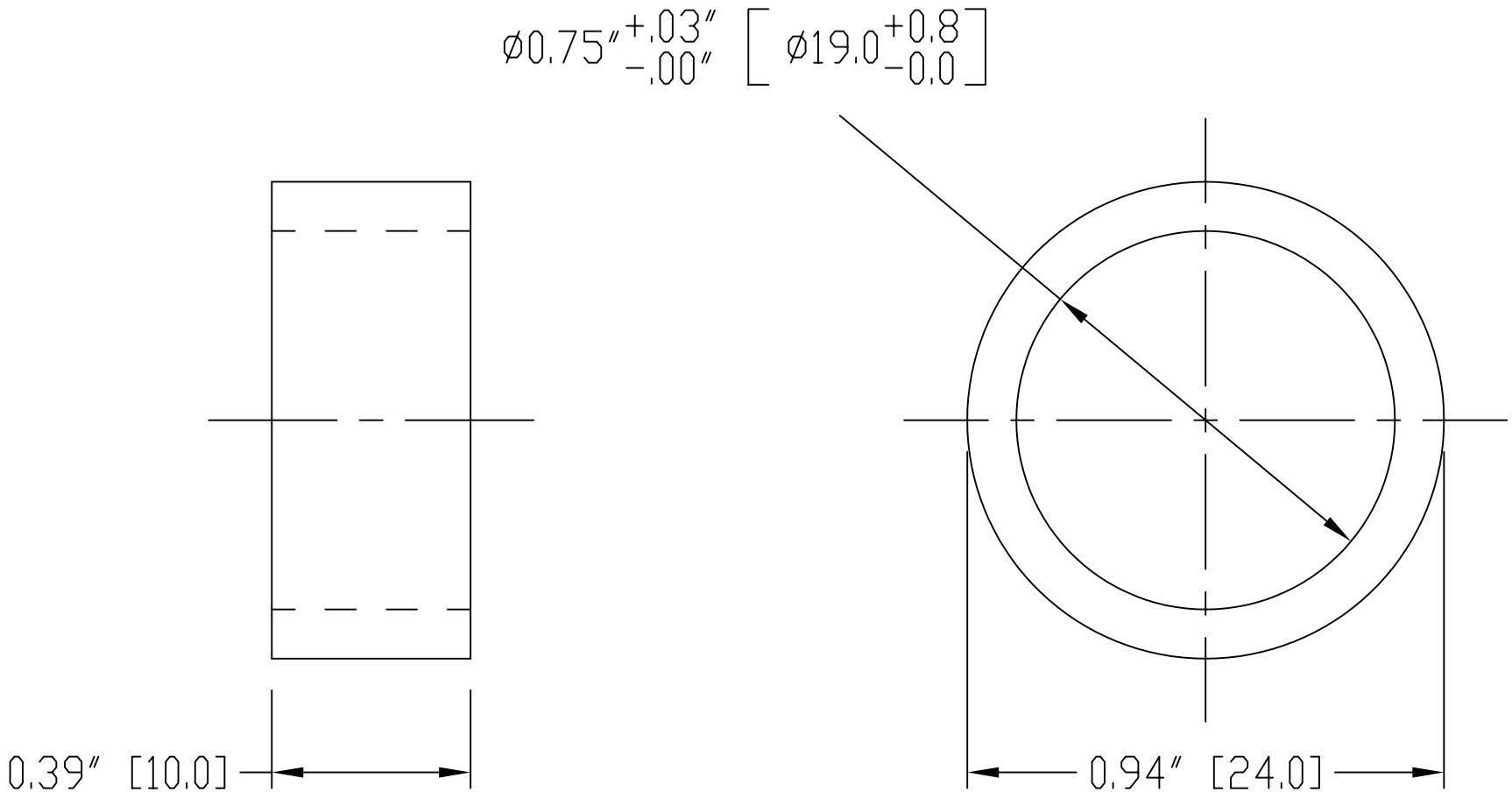

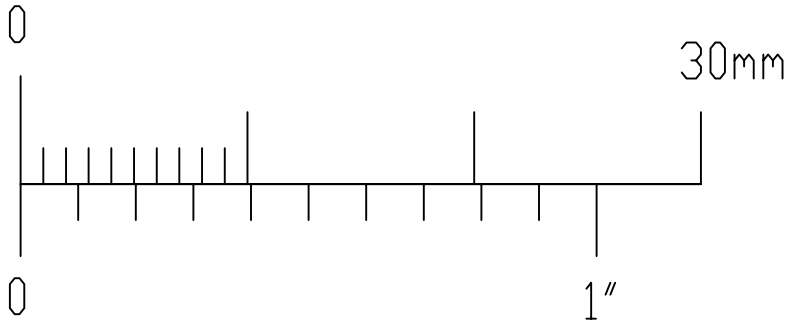

TOLERANCES:
UNLESS OTHERWISE SPECIFIED
DECIMAL: ±1mm
FRACTIONAL ±1/32″
ANGULAR ±1°

DISCOVER HOVER ONE

© COPYRIGHT, WORLDHOVERCRAFT.ORG, 2004

DWG NAME:	SPACER		
SCALE: AS SHOWN	USED ON: 47	ASSEMBLY NAME: RUDDER	
MATERIAL:	(PLASTIC, PVC, NYLON, etc.)		
DRAWN BY:	M. Shima, D. Oelschlager, J. Schlottman, R. Wilson		
QUANTITY: 1	APPD BY: XXXXX		DWG NO. 42
DATE:	JANUARY 2004		

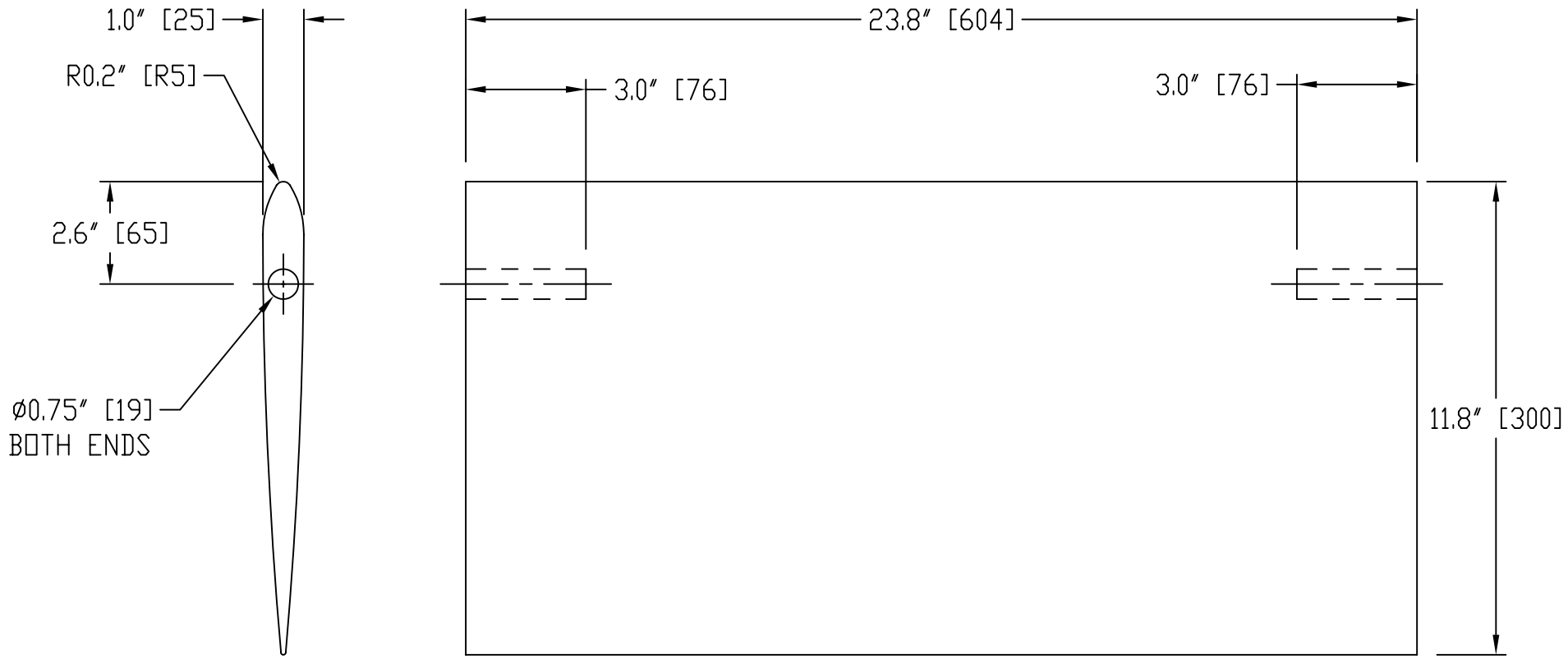

NOTE- COAT SURFACE WITH EPOXY RESIN/GLASS FIBER & SAND SMOOTH

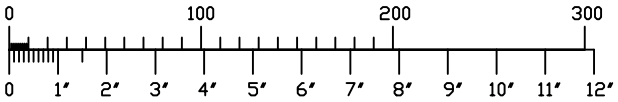

TOLERANCES:
UNLESS OTHERWISE SPECIFIED
DECIMAL: ±3mm
FRACTIONAL ±1/8
ANGULAR ±1°

DISCOVER HOVER ONE

© COPYRIGHT, WORLDHOVERCRAFT.ORG, 2004

DWG NAME:	RUDDER		
SCALE: AS SHOWN	USED ON: 47	ASSEMBLY NAME: RUDDER	
MATERIAL:	POLYSTYRENE FOAM 24″x 12″x 1″ [305x610x25]		
DRAWN BY:	M. Shima, D. Oelschlager, J. Schlottman, R. Wilson		
QUANTITY: 1	APPD BY: XXXXX		DWG NO. 43
DATE:	JANUARY 2004		

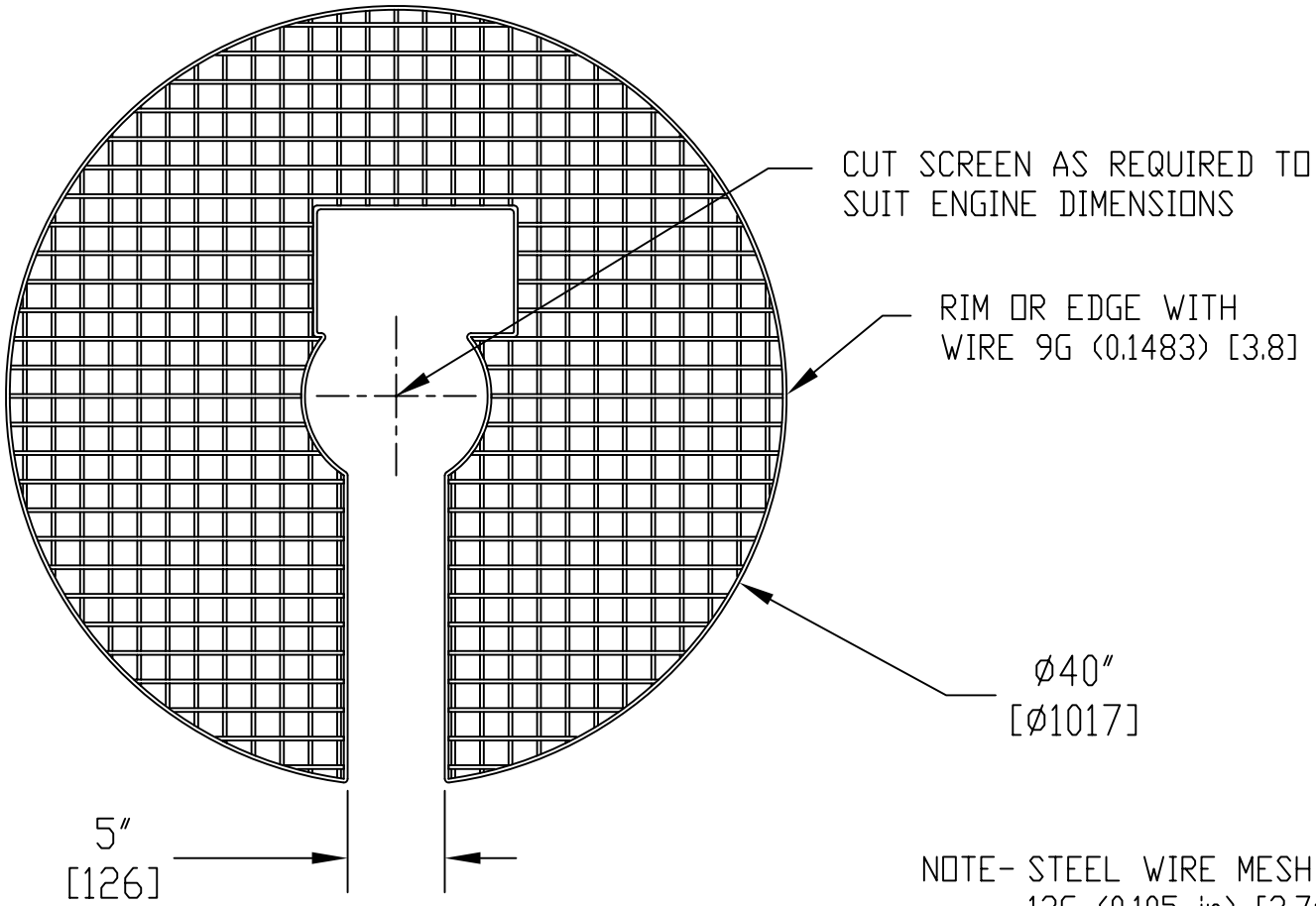

NOTE- STEEL WIRE MESH 2″x2″
12G (0.105 in) [2.7mm] WIRE
ON 2″ [50mm]CENTERS

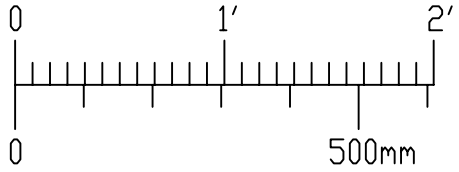

TOLERANCES:
UNLESS
OTHERWISE
SPECIFIED
DECIMAL:
±3mm
FRACTIONAL
±1/8
ANGULAR
±1°

DISCOVER HOVER ONE

© COPYRIGHT, WORLDHOVERCRAFT.ORG, 2004

DWG NAME:	SCREEN		
SCALE: AS SHOWN	USED ON: 48	ASSEMBLY NAME: DUCT	
MATERIAL:	STEEL MESH		
DRAWN BY:	M. Shima, D. Oelschlager, J. Schlottman, R. Wilson		
QUANTITY: 1	APPD BY: XXXXX		DWG NO. 44
DATE:	JANUARY 2004		

ROTATION CLOCKWISE FROM FRONT OF PROP.

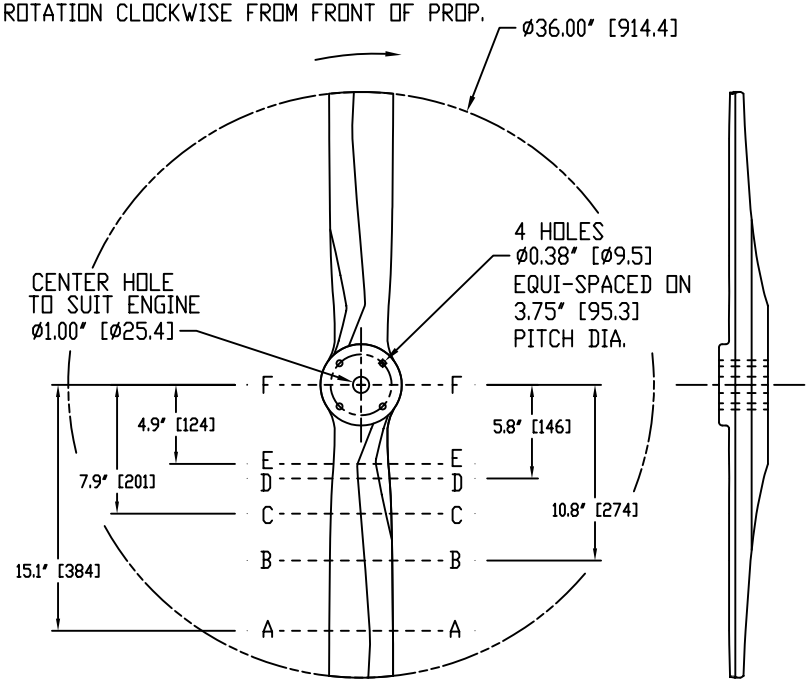

TIP SECTION
SCALE x3

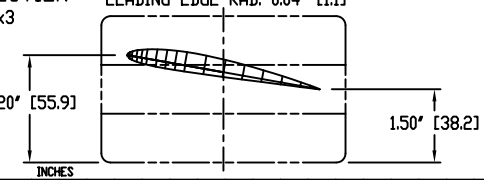

		INCHES																
UPPER	STATION	.04	.09	.19	.29	.39	.59	.79	.99	1.19	1.60	2.00	2.40	2.80	3.20	3.60	3.80	4.00
SURFACE	ORDINATE	.07	.10	.14	.17	.19	.23	.25	.27	.28	.27	.25	.22	.18	.13	.07	.04	0.0
LOWER	STATION	.06	.11	.21	.31	.41	.61	.81	1.01	1.21	1.60	2.00	2.40	2.80	3.20	3.60	3.80	4.00
SURFACE	ORDINATE	.06	.08	.10	.11	.12	.13	.13	.13	.12	.11	.10	.08	.06	.04	.02	.01	0.0

SECTION CC
SCALE x3

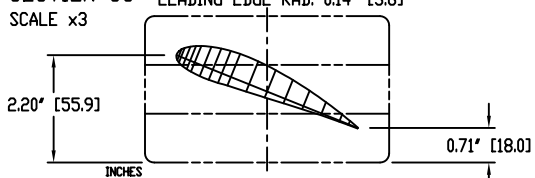

		INCHES																
UPPER	STATION	.05	.10	.20	.30	.40	.60	.80	1.00	1.20	1.60	2.00	2.40	2.80	3.20	3.60	3.80	4.00
SURFACE	ORDINATE	.15	.20	.27	.32	.36	.43	.47	.50	.51	.51	.47	.42	.34	.25	.14	.08	.01
LOWER	STATION	.05	.10	.20	.30	.40	.60	.80	1.00	1.20	1.60	2.00	2.40	2.80	3.20	3.60	3.80	4.00
SURFACE	ORDINATE	.08	.12	.16	.19	.20	.22	.22	.22	.21	.19	.16	.13	.10	.07	.04	.02	.01

SECTION AA
SCALE x3

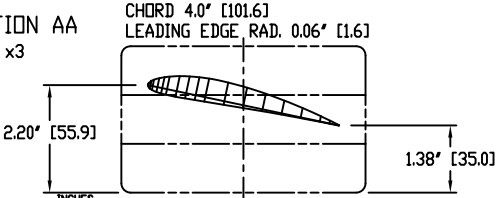

		INCHES																
UPPER	STATION	.05	.10	.20	.30	.40	.60	.80	1.00	1.20	1.60	2.00	2.40	2.80	3.20	3.60	3.80	4.00
SURFACE	ORDINATE	.10	.14	.19	.23	.26	.32	.35	.38	.39	.39	.37	.33	.27	.20	.11	.06	0.0
LOWER	STATION	.05	.10	.20	.30	.40	.60	.80	1.00	1.20	1.60	2.00	2.40	2.80	3.20	3.60	3.80	4.00
SURFACE	ORDINATE	.06	.08	.10	.11	.11	.12	.11	.10	.09	.07	.06	.04	.03	.02	.01	.01	0.0

SECTION DD
SCALE x3

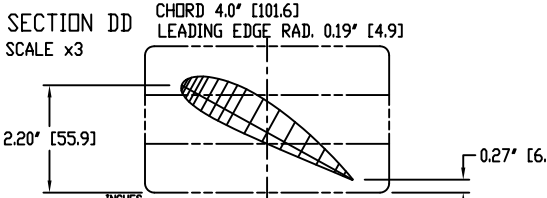

		INCHES																
UPPER	STATION	.05	.10	.20	.30	.40	.60	.80	1.00	1.20	1.60	2.00	2.40	2.80	3.20	3.60	3.80	4.00
SURFACE	ORDINATE	.18	.23	.31	.37	.41	.48	.53	.56	.57	.57	.53	.46	.38	.28	.15	.08	.01
LOWER	STATION	.05	.10	.20	.30	.40	.60	.80	1.00	1.20	1.60	2.00	2.40	2.80	3.20	3.60	3.80	4.00
SURFACE	ORDINATE	.10	.14	.19	.22	.25	.27	.28	.28	.27	.25	.21	.18	.13	.09	.05	.03	.01

SECTION BB
SCALE x3

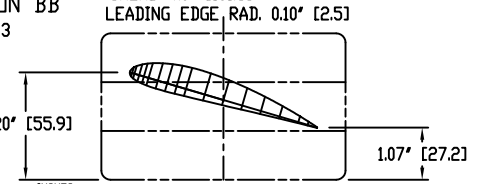

		INCHES																
UPPER	STATION	.05	.10	.20	.30	.40	.60	.80	1.00	1.20	1.60	2.00	2.40	2.80	3.20	3.60	3.80	4.00
SURFACE	ORDINATE	.12	.17	.23	.28	.31	.37	.41	.44	.45	.45	.42	.37	.31	.22	.12	.07	.01
LOWER	STATION	.05	.10	.20	.30	.40	.60	.80	1.00	1.20	1.60	2.00	2.40	2.80	3.20	3.60	3.80	4.00
SURFACE	ORDINATE	.07	.10	.13	.15	.16	.17	.17	.16	.15	.13	.11	.09	.06	.04	.02	.01	.01

SECTION EE
SCALE x3

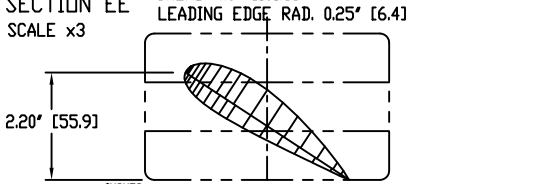

		INCHES																
UPPER	STATION	.02	.06	.15	.25	.34	.55	.76	.96	1.18	1.60	2.01	2.42	2.82	3.22	3.61	3.81	4.00
SURFACE	ORDINATE	.16	.22	.32	.39	.44	.52	.58	.61	.63	.62	.58	.51	.41	.30	.16	.08	0.0
LOWER	STATION	.08	.14	.25	.35	.46	.65	.85	1.04	1.22	1.60	2.00	2.38	2.78	3.18	3.59	3.79	4.00
SURFACE	ORDINATE	.14	.19	.24	.28	.30	.33	.34	.34	.33	.30	.27	.22	.17	.12	.07	.04	0.0

NOTE-

(1) THREE BOARDS 1"x 5"x 36.5" [25x130x927] PLANED FLAT & PARALLEL ARE REQUIRED. SELECT KILN DRIED, STRAIGHT GRAIN PINE, MAPLE, ASH OR SIMILAR WOOD FREE FROM KNOTS & DEFECTS. QUARTER SAWN TIMBER (GROWTH RING ANGLE LESS THAN 45° WITH LONG SIDE) PREFERRED.

(2) EPOXY GLUE LAMINATIONS. USE AMPLE ADHESIVE AND CLAMP RIGHT ALONG BOARDS TIGHTLY TO ENSURE NO VOIDS ARE PRODUCED.

(3) AFTER GLUE JOINT IS FULLY CURED TRIM BLADES TO APPROX. 4" WIDTH & HUB TO 5" DIA.

(4) MARK LEADING AND TRAILING EDGE LINES. REMOVE MOST EXCESS WOOD WITH A BANDSAW OR SIMILAR TOOL- ENSURE AMPLE REMAINS TO FORM PROFILE.

(5) USE ORDINATES TO MAKE SHEETMETAL TEMPLATES FOR UPPER AND LOWER PROFILES AT EACH STATION GIVEN. ROUGH OUT SHAPES & ANGLES AT EACH STATION USING SPOKESHAVE, RASP & FILE.

(6) BLEND IN INTERMEDIATE POINTS & HUB. SAND SMOOTH ALL OVER.

(7) DRILL CENTER HOLE AND MOUNT HOLES. USE METAL PROP HUB AS A DRILLING TEMPLATE.

(8) TRIM BLADE TIPS TO DIAMETER AND CONCENTRIC WITH CENTER.

(9) STATICALLY BALANCE PROP ON KNIFE EDGES TO 1 OZ. IN. [0.007 Nm], PREFERABLY BY SANDING THE HEAVY BLADE.

(10) APPLY A FIRST COAT OF EPOXY RESIN, THINNED TO PENETRATE WOOD. CHECK BALANCE AND APPLY SECOND COAT.

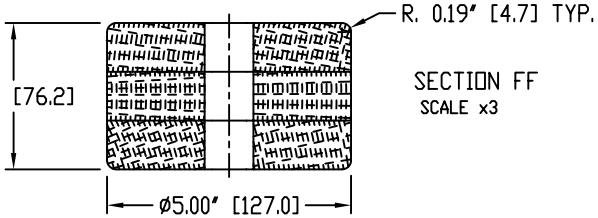

SECTION FF
SCALE x3

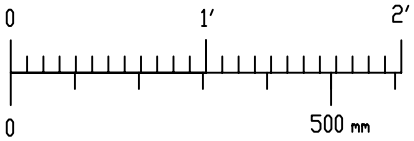

TOLERANCES: UNLESS OTHERWISE SPECIFIED
DECIMAL: ±0.04" [1.0]
FRACTIONAL ±1/32"
ANGULAR ±1°

DISCOVER HOVER ONE

© COPYRIGHT, WORLDHOVERCRAFT.ORG, 2004

DWG NAME: PROPELLER			
SCALE: AS SHOWN	USED ON: 48	ASSEMBLY NAME: DUCT ASSY.	
MATERIAL: WOOD AS SPECIFIED (3 PIECES) 1"x 5"x 36.5" [25x130x927]			
DRAWN BY: R. Wilson, D. Oelschlager			
QUANTITY: 1	APPD BY: XXXXX		DWG NO. 45
DATE: MARCH, 2004			

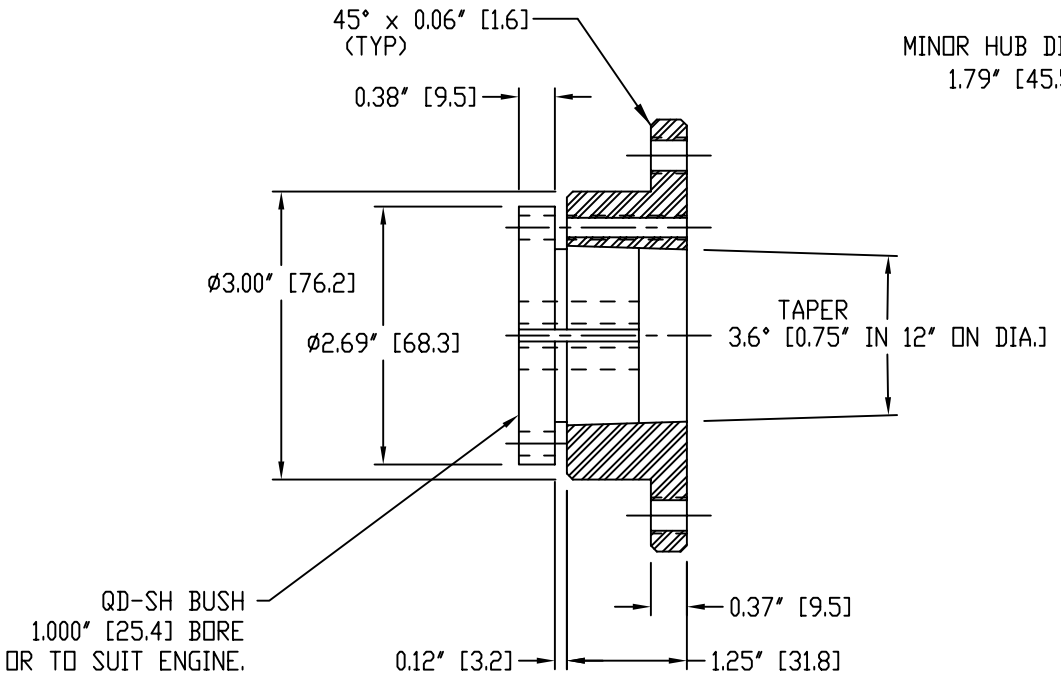

SECTION A-A

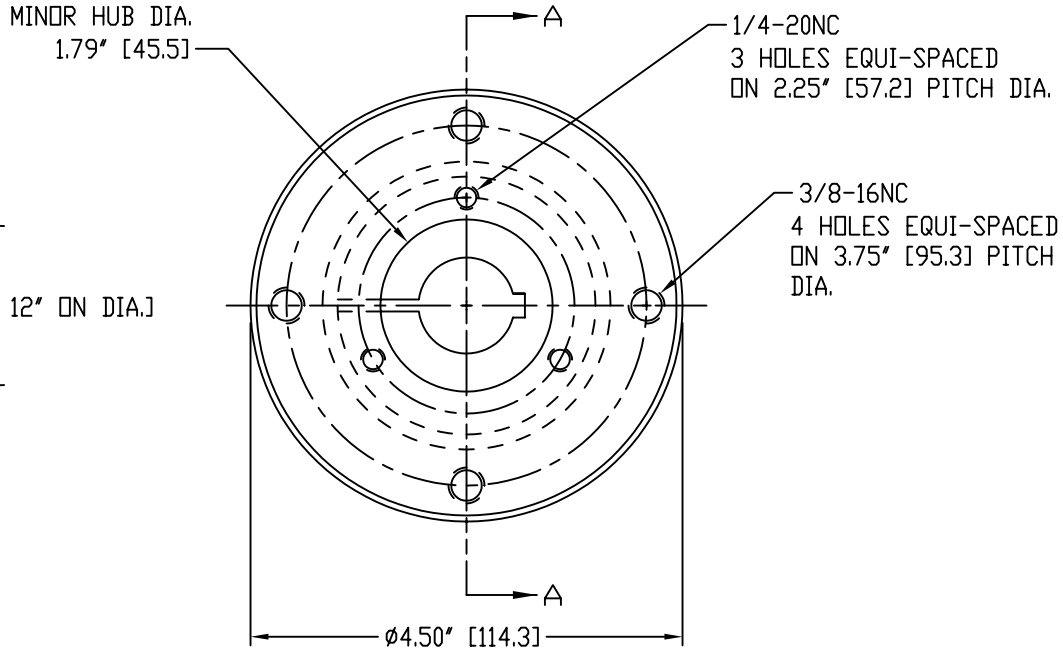

NOTE- (1) HUB CAN BE MADE FROM A STANDARD ROLLER CHAIN STEEL SPROCKET.
(2) BORE TO SUIT ENGINE SHAFT DIAMETER.

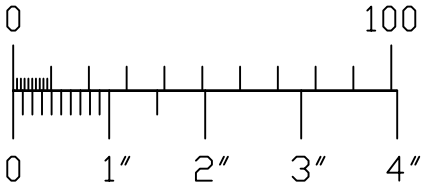

TOLERANCES: UNLESS OTHERWISE SPECIFIED DECIMAL: ±0.4mm FRACTIONAL ±1/64" ANGULAR ±1°	DISCOVER HOVER ONE		
	© COPYRIGHT, WORLDHOVERCRAFT.ORG, 2004		
	DWG NAME: PROP HUB		
	SCALE: AS SHOWN	USED ON: 48	ASSEMBLY NAME: DUCT
	MATERIAL: STEEL OR ALUMINUM		
	DRAWN BY: M. Shima, D. Oelschlager, J. Schlottman, R. Wilson		
	QUANTITY: 1	APPD BY: XXXXX	DWG NO. 46
	DATE: JANUARY 2004		

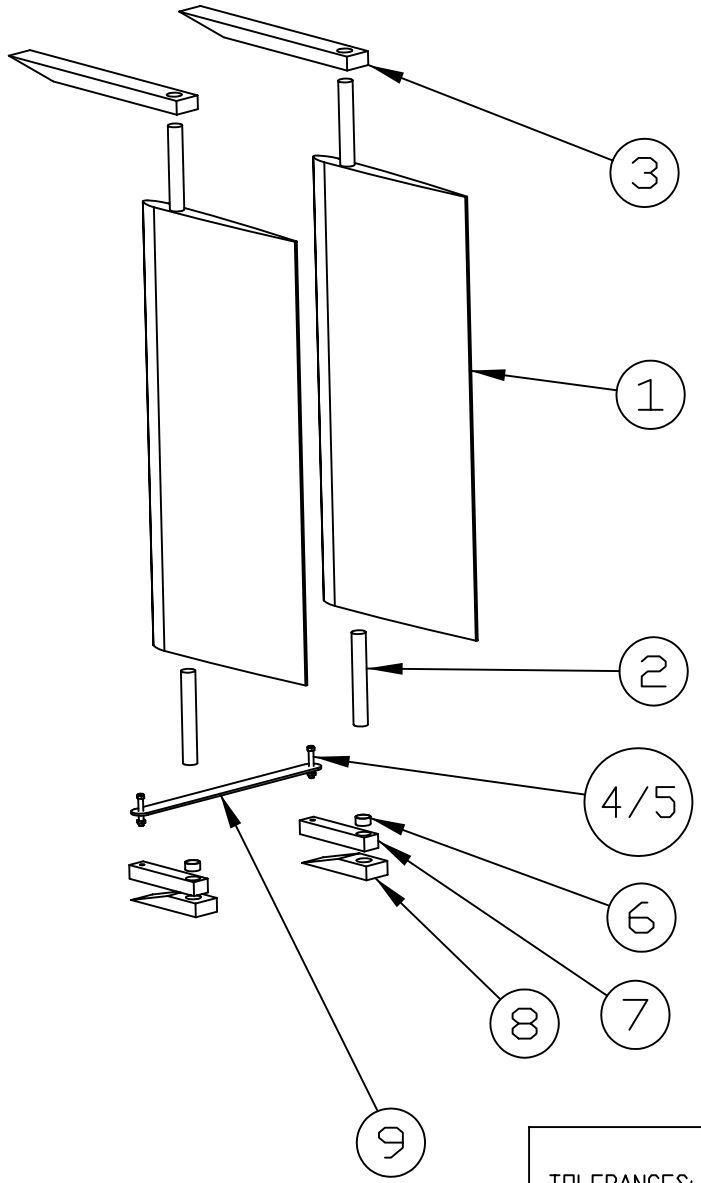

ITEM NO.	ITEM	QTY	PART NO.
1	RUDDER	2	43
2	ø3/4in DOWEL	4	73
3	RUDDER BRIDGE UPPER	2	18
4	1/4in UNF BOLT	2	74
5	1/4in UNF NUT	2	75
6	SPACER	2	42
7	RUDDER ARM	2	41
8	RUDDER BRIDGE LOWER	2	19
9	RUDDER TIE BAR	1	40

TOLERANCES: UNLESS OTHERWISE SPECIFIED
DECIMAL: ±3mm
FRACTIONAL ±1/8
ANGULAR ±1°

DISCOVER HOVER ONE

© COPYRIGHT, WORLDHOVERCRAFT.ORG, 2004

DWG NAME: RUDDER SUB-ASSEMBLY

SCALE: 0.100 | USED ON: 6 1 | ASSEMBLY NAME: CONTROLS

MATERIAL:

DRAWN BY: M. Shima, D. Oelschlager, J. Schlottman, R. Wilson

QUANTITY: 1 | APPD BY: XXXXX | DWG NO. 47

DATE: JANUARY 2004

NOTE- LEADING EGDE OF PROPELLOR MUST CONINCIDE WITH ROTATION OF ENGINE

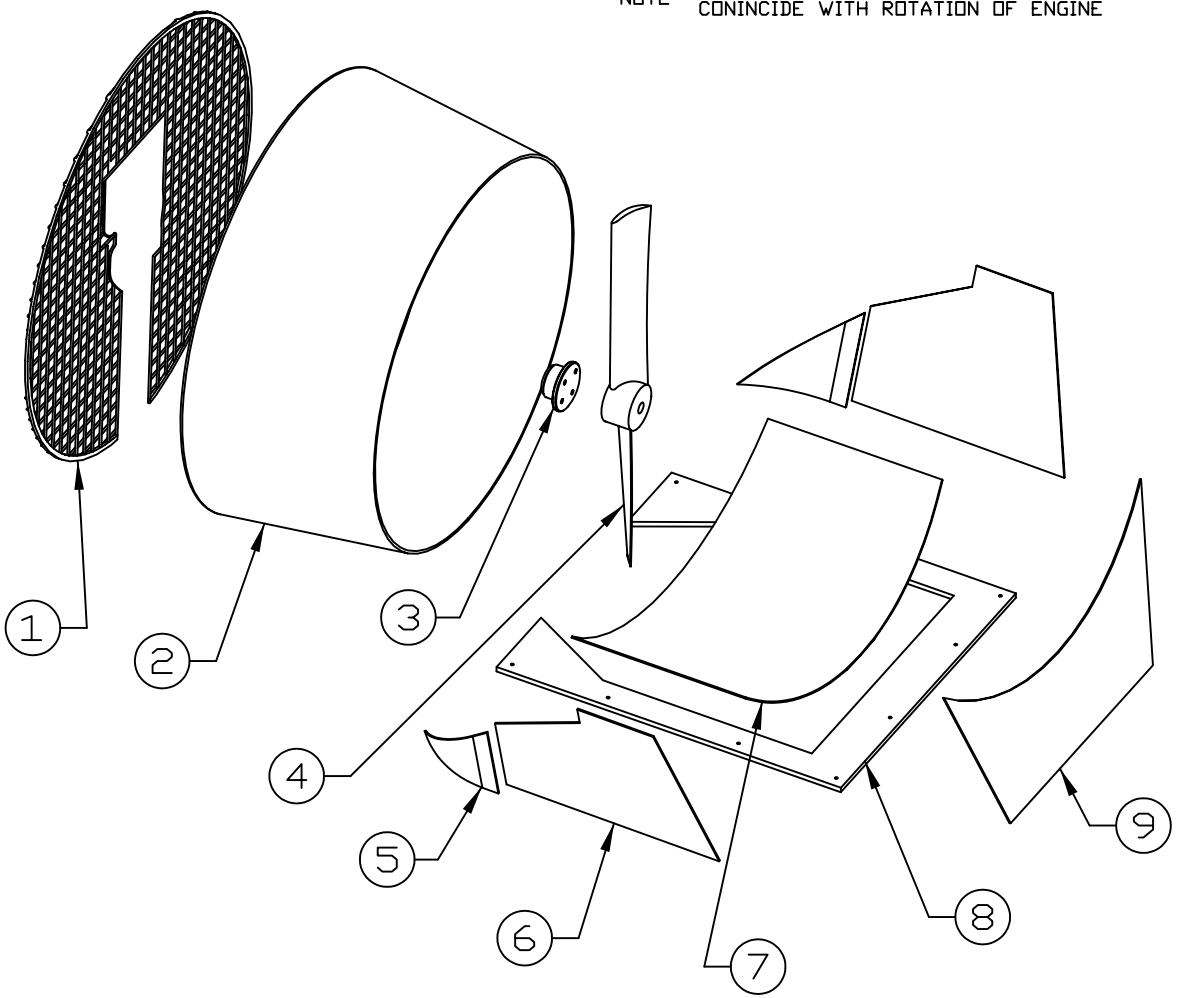

ITEM NO.	ITEM	QTY	PART NO.
1	SCREEN	1	44
2	THRUST DUCT	1	39
3	PROP HUB	1	46
4	PROPELLER	1	45
5	AIRBOX INFILL	2	26
6	AIRBOX SIDE	2	38
7	AIRBOX TOP	1	37
8	DUCT BASE	1	63
9	AIRBOX BACK	1	36

TOLERANCES: UNLESS OTHERWISE SPECIFIED
DECIMAL: ±3mm
FRACTIONAL ±1/8
ANGULAR ±1°

DISCOVER HOVER ONE

© COPYRIGHT, WORLDHOVERCRAFT.ORG, 2004

DWG NAME: DUCT ASSEMBLY

SCALE: 0.075 | USED ON: 70 | ASSEMBLY NAME: HOVERCRAFT

MATERIAL:

DRAWN BY: M. Shima, D. Oelschlager, J. Schlottman, R. Wilson

QUANTITY: 1 | APPD BY: XXXXX | DWG NO. 48

DATE: JANUARY 2004

ITEM NO.	ITEM	QTY	PART NO.
1	ENGINE	1	77
2	ENGINE MOUNT	1	33
3	BRACING FIN	2	16
4	BRACKET RIGHT	1	7
5	BRACKET LEFT	1	8
6	5/16 x 2 1/2 UNF BOLT	1	71
7	5/16 UNF NUT	1	72
8	WEDGE	4	21
9	ENGINE POST	1	6
10	BOLT 1/4-20 x 3 [M6 x 1 x 76 mm]	4	102
11	FENDER WASHER	8	85
12	PLYWOOD WASHER 3 x 6 [76 x 152 mm]	2	
13	NUT 1/4-20 [M6 x 1 mm]	4	103
14	Ø1 x 2 1/4 [Ø25 x 51 mm] DOWEL	4	

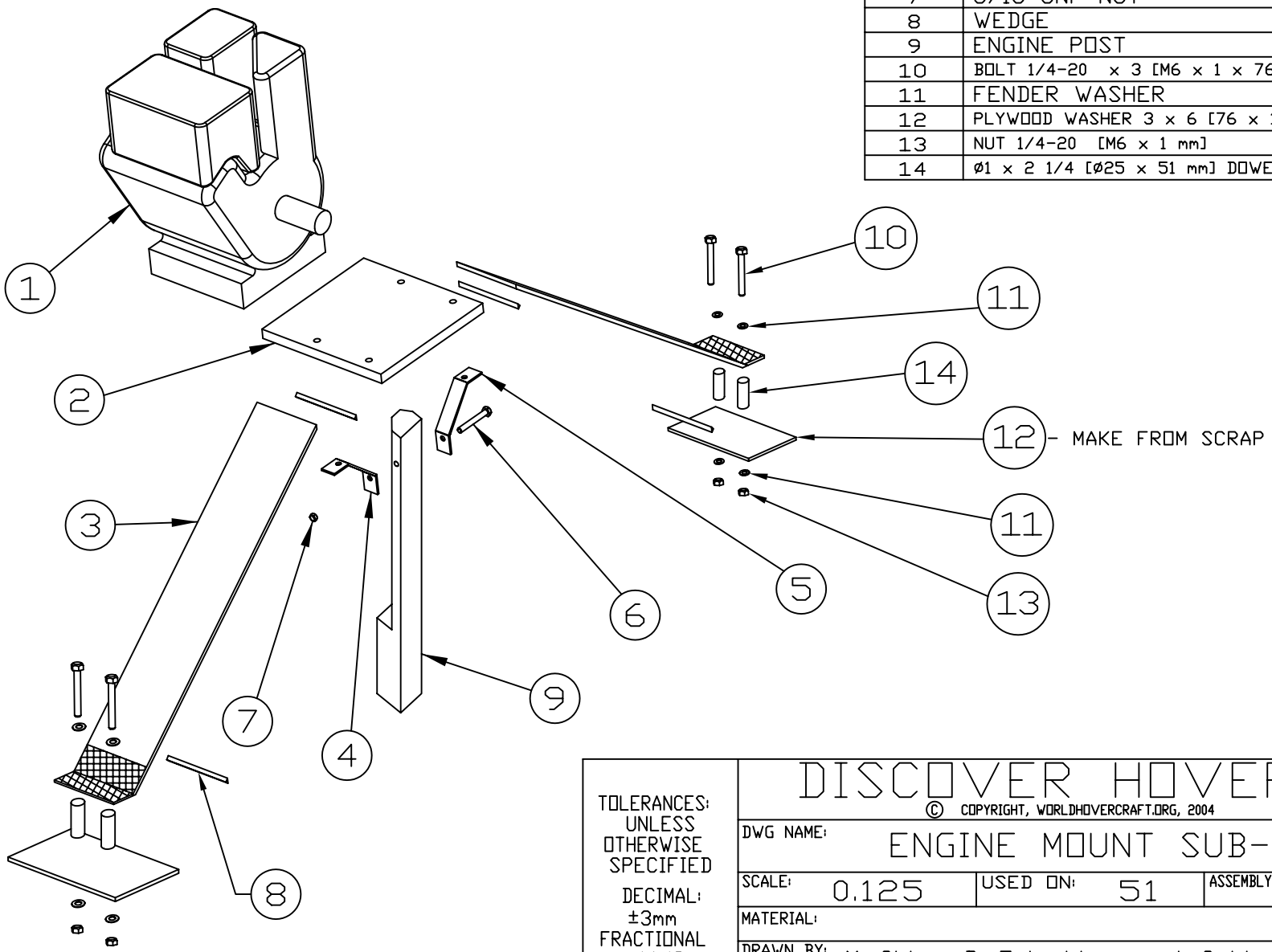

TOLERANCES: UNLESS OTHERWISE SPECIFIED
DECIMAL: ±3mm
FRACTIONAL ±1/8
ANGULAR ±1°

DISCOVER HOVER ONE

© COPYRIGHT, WORLDHOVERCRAFT.ORG, 2004

DWG NAME: ENGINE MOUNT SUB-ASSEMBLY

SCALE: 0.125 | USED ON: 51 | ASSEMBLY NAME: HOVERCRAFT

MATERIAL:

DRAWN BY: M. Shima, D. Oelschlager, J. Schlottman, R. Wilson

QUANTITY: 1 | APPD BY: XXXXX | DWG NO. 49

DATE: JANUARY 2004

HULL PICTURED UPSIDE DOWN

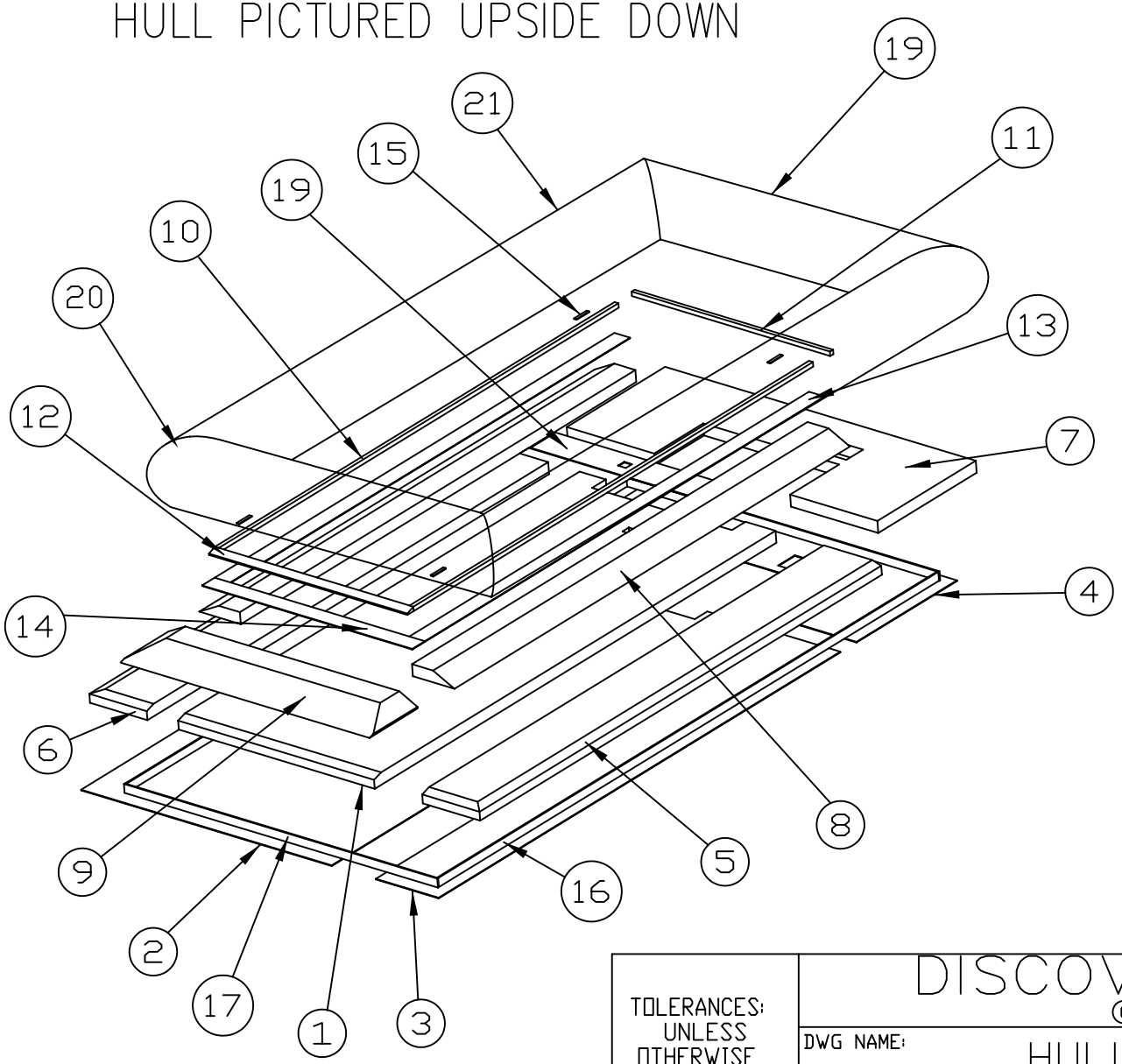

ITEM NO.	ITEM	QTY	PART NO.
1	HULL FOAM BLOCK 1	1	34
2	MAIN DECK PANEL 1	1	2
3	MAIN DECK PANEL 3	1	1
4	MAIN DECK PANEL 2	1	3
5	HULL FOAM BLOCK 2 (RIGHT)	1	9
6	HULL FOAM BLOCK 2 (LEFT)	1	10
7	HULL FOAM BLOCK 4	1	35
8	HULL FOAM BLOCK 6	2	11
9	HULL FOAM BLOCK 5	1	14
10	SKIRT MOUNT SIDE	2	31
11	SKIRT MOUNT REAR	1	32
12	SKIRT MOUNT FRONT	1	30
13	SKID MOUNT SIDE	2	29
14	SKID MOUNT FRONT	1	28
15	LANDING SKID	4	53
16	SKIRT ATT. STRIP SIDE	2	24
17	SKIRT ATT. STRIP FRONT	2	23
18	SKIRT REAR	1	69
19	STIFFNER	1	12
20	SKIRT FRONT	1	66
21	SKIRT SIDE	2	67

TOLERANCES:
UNLESS OTHERWISE SPECIFIED
DECIMAL: ±3mm
FRACTIONAL ±1/8
ANGULAR ±1°

DISCOVER HOVER ONE

© COPYRIGHT, WORLDHOVERCRAFT.ORG, 2004

DWG NAME: HULL ASSEMBLY

SCALE:

USED ON: 70

ASSEMBLY NAME: HOVERCRAFT

MATERIAL:

DRAWN BY: M. Shima, D. Oelschlager, J. Schlottman, R. Wilson

QUANTITY: 1

APPD BY: XXXXX

DWG NO. 50

DATE: JANUARY 2004

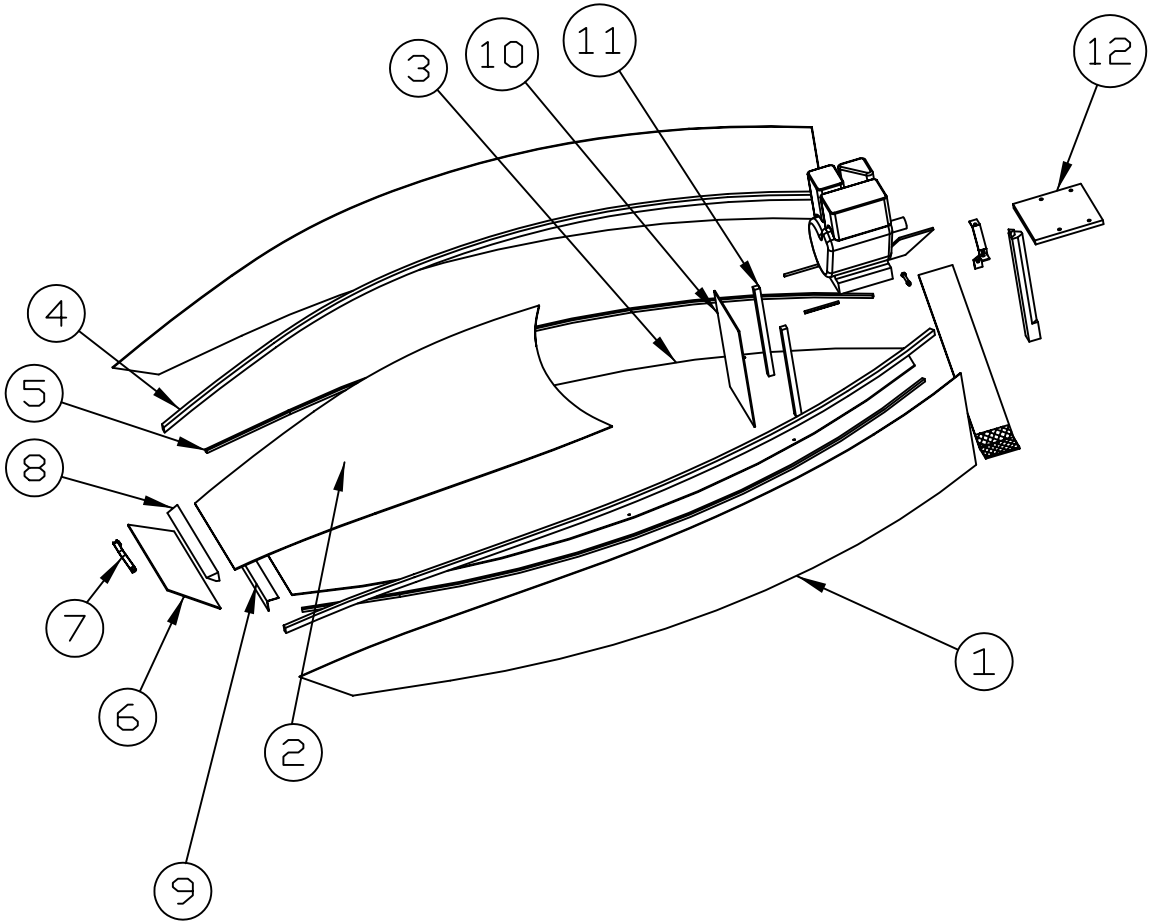

ITEM NO.	ITEM	QTY	PART NO.
1	COCKPIT SIDE	2	4
2	COCKPIT TOP	1	5
3	BODY BASE	1	65
4	STRINGER TOP	2	20
5	STRINGER BOTTOM	2	15
6	FRONT INFILL	1	27
7	OPTIONAL FRONT HANDLE	1	54
8	NOSE BLOCK	1	17
9	FRONT ATTACHMENT	1	60
10	SEAT BACK	1	22
11	SUPPORT	2	25
12	ENGINE MOUNT SUB	1	49

NOTE- GLUE ATTACHMENT 60
TO 65 USING EPOXY

TOLERANCES:
UNLESS
OTHERWISE
SPECIFIED
DECIMAL:
±3mm
FRACTIONAL
±1/8
ANGULAR
±1°

DISCOVER HOVER ONE

© COPYRIGHT, WORLDHOVERCRAFT.ORG, 2004

DWG NAME: BODY ASSEMBLY

SCALE: 70

ASSEMBLY NAME: HOVERCRAFT

MATERIAL:

DRAWN BY: M. Shima, D. Oelschlager, J. Schlottman, R. Wilson

QUANTITY: 1

APPD BY: XXXXX

DWG NO. 51

DATE: JANUARY 2004

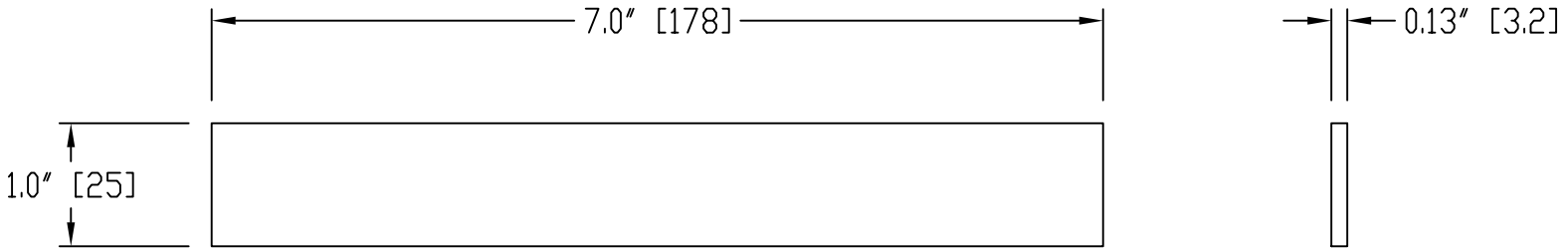

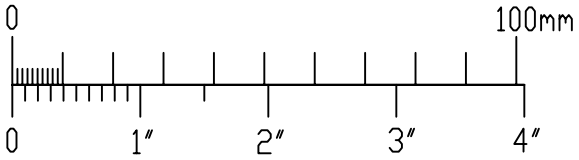

TOLERANCES:
UNLESS
OTHERWISE
SPECIFIED
DECIMAL:
±1mm
FRACTIONAL
±1/32″
ANGULAR
±1°

DISCOVER HOVER ONE

© COPYRIGHT, WORLDHOVERCRAFT.ORG, 2004

DWG NAME:	HANDLE		
SCALE: AS SHOWN	USED ON: 50	ASSEMBLY NAME: HULL	
MATERIAL:	NYLON WEBBING 7″x 1″x 1/8″ [178x25x3]		
DRAWN BY:	M. Shima, D. Oelschlager, J. Schlottman, R. Wilson		
QUANTITY: 1	APPD BY: XXXXX	DWG NO. 52	
DATE:	JANUARY 2004		

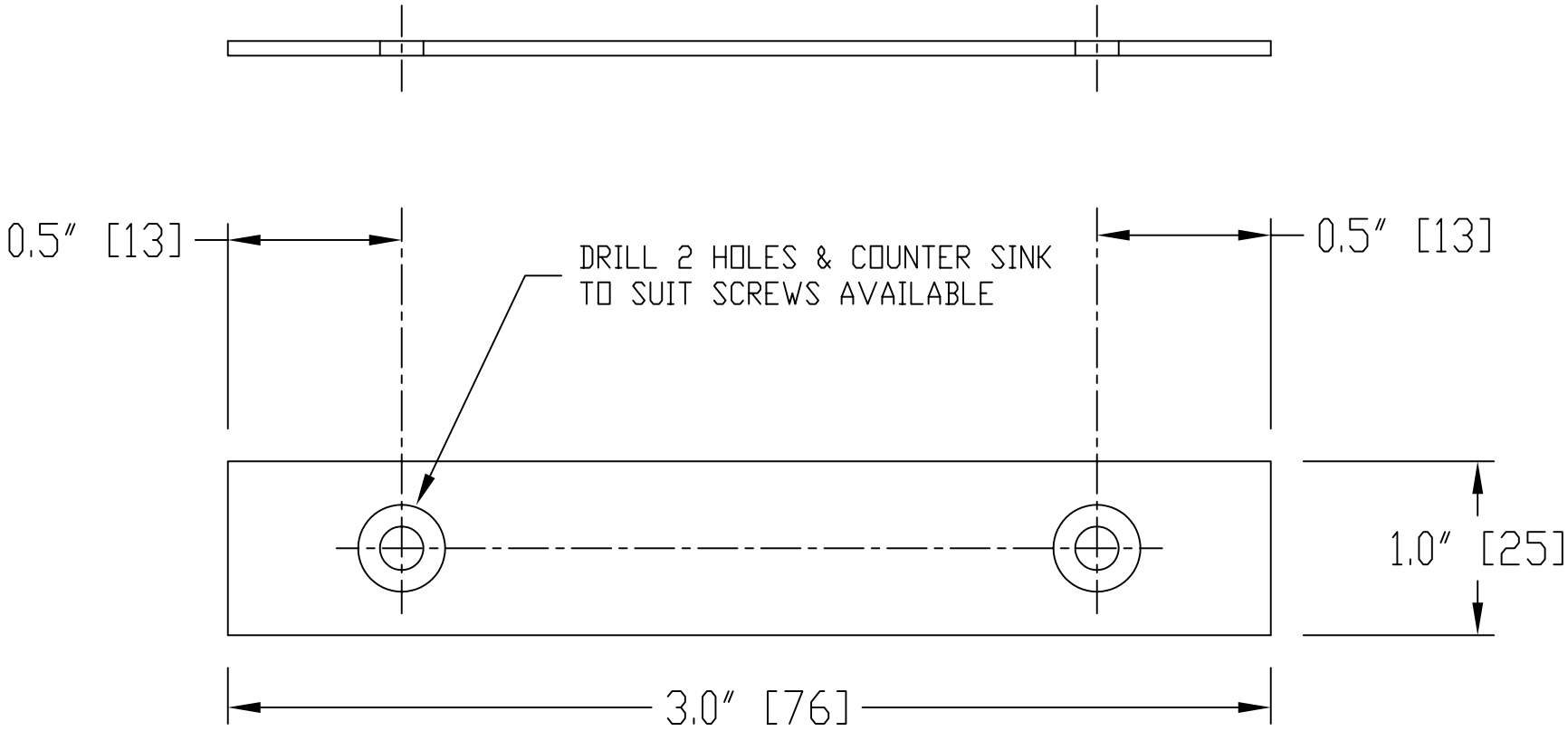

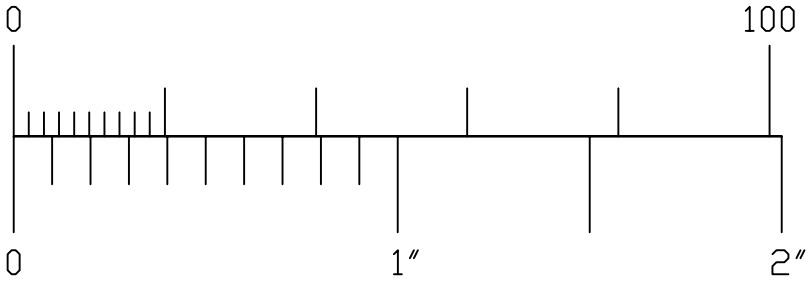

TOLERANCES:
UNLESS OTHERWISE SPECIFIED
DECIMAL: ±1mm
FRACTIONAL ±1/32″
ANGULAR ±1°

DISCOVER HOVER ONE

© COPYRIGHT, WORLDHOVERCRAFT.ORG, 2004

DWG NAME:	LANDING SKID		
SCALE: AS SHOWN	USED ON: 50	ASSEMBLY NAME: HULL	
MATERIAL:	ALUMINUM FLAT 3″x 1/2″x 1/8″ [76.2x12.7x3]]		
DRAWN BY:	M. Shima, D. Oelschlager, J. Schlottman, R. Wilson		
QUANTITY: 1	APPD BY: XXXXX	DWG NO. 53	
DATE:	JANUARY 2004		

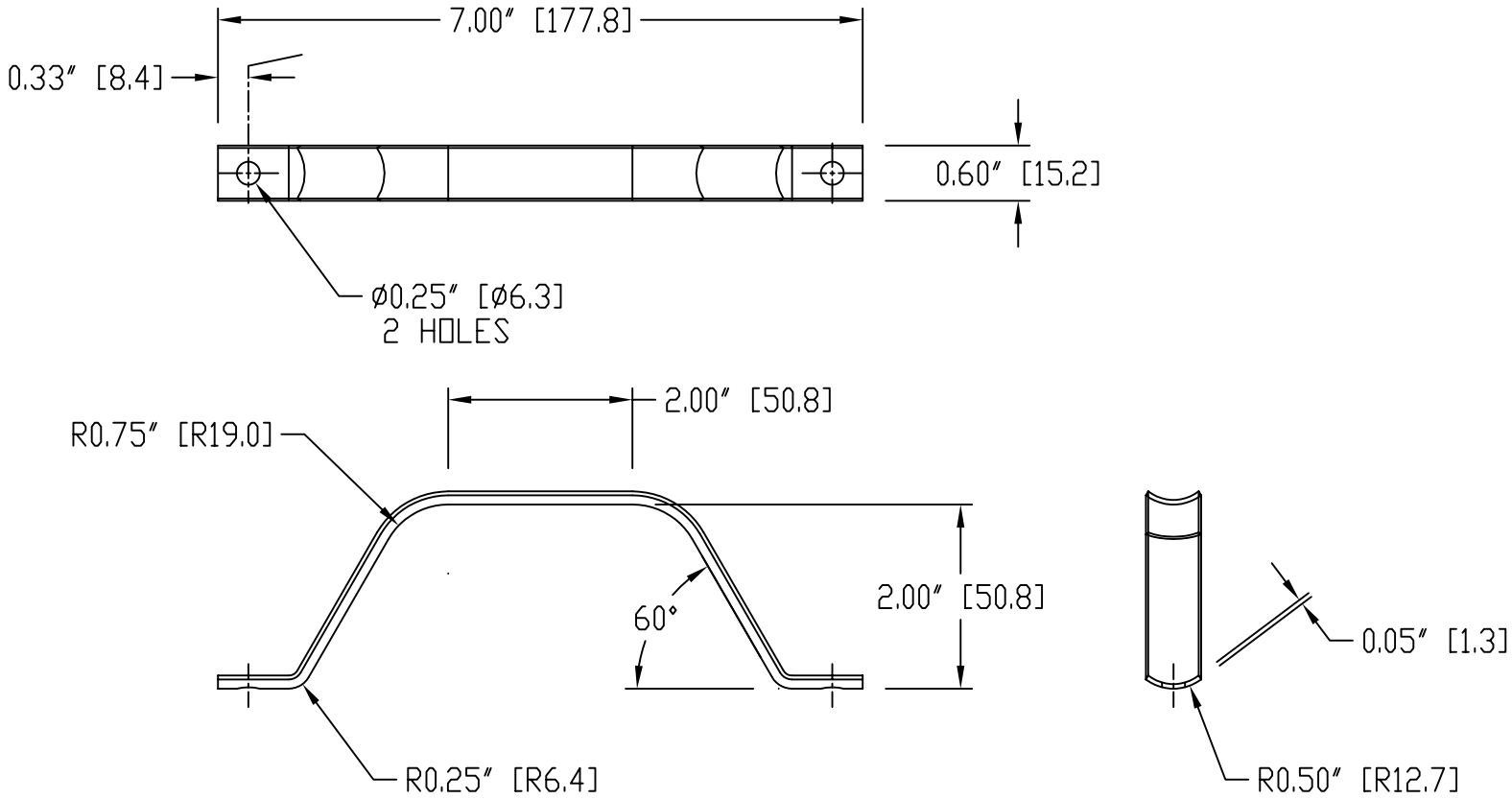

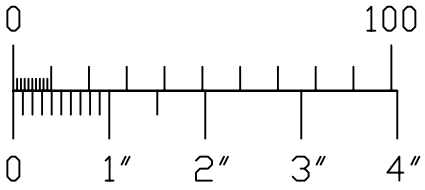

TOLERANCES: UNLESS OTHERWISE SPECIFIED
DECIMAL: ±1mm
FRACTIONAL ±1/32″
ANGULAR ±1°

DISCOVER HOVER ONE

© COPYRIGHT, WORLDHOVERCRAFT.ORG, 2004

DWG NAME:	OPTIONAL FRONT HANDLE		
SCALE: AS SHOWN	USED ON: 51	ASSEMBLY NAME: BODY	
MATERIAL:	PURCHASED ALUMINUM HANDLE		
DRAWN BY:	M. Shima, D. Oelschlager, J. Schlottman, R. Wilson		
QUANTITY: 1	APPD BY: XXXXX	DWG NO. 54	
DATE:	JANUARY 2004		

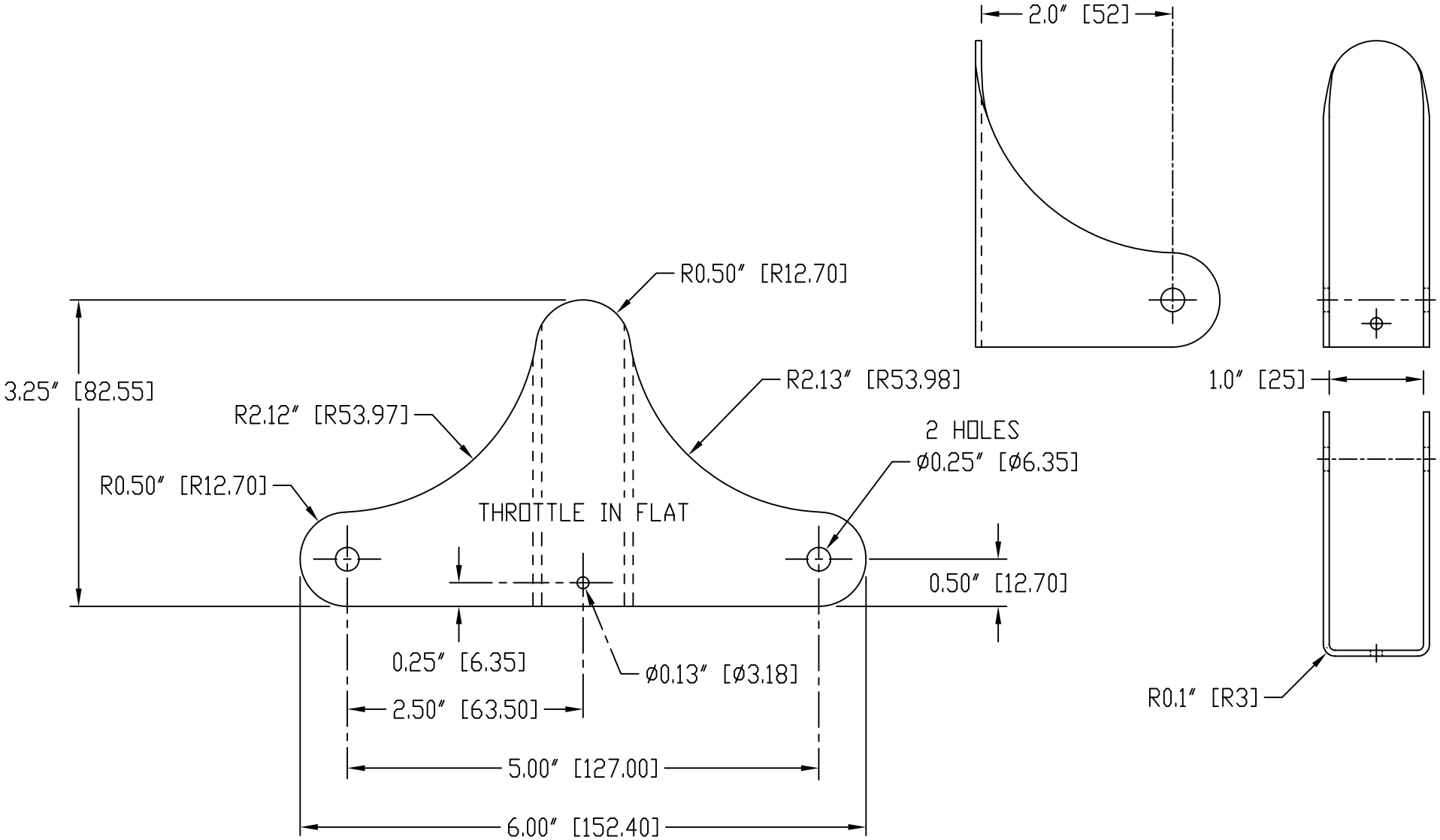

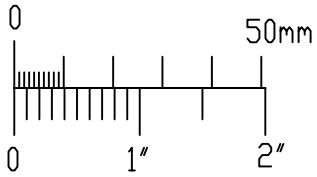

TOLERANCES: UNLESS OTHERWISE SPECIFIED
DECIMAL: ±1mm
FRACTIONAL ±1/32″
ANGULAR ±1°

DISCOVER HOVER ONE

© COPYRIGHT, WORLDHOVERCRAFT.ORG, 2004

DWG NAME:	HAND THROTTLE		
SCALE: AS SHOWN	USED ON: 56	ASSEMBLY NAME: STEERING	
MATERIAL:	1/16″ [1.6] ALUMINUM SHEET 6″x3.3″ [152x83]		
DRAWN BY:	M. Shima, D. Oelschlager, J. Schlottman, R. Wilson		
QUANTITY: 1	APPD BY: XXXXX	DWG NO. 55	
DATE:	JANUARY 2004		

ITEM NO.	ITEM	QTY	PART NO.
1	HAND THROTTLE	1	55
2	1/4in UNF BOLT	2	74
3	1/4in UNF NUT	2	75
4	STEERING STICK	1	13
5	PURCHASED HINGE	1	76
6	WASHER	6	85

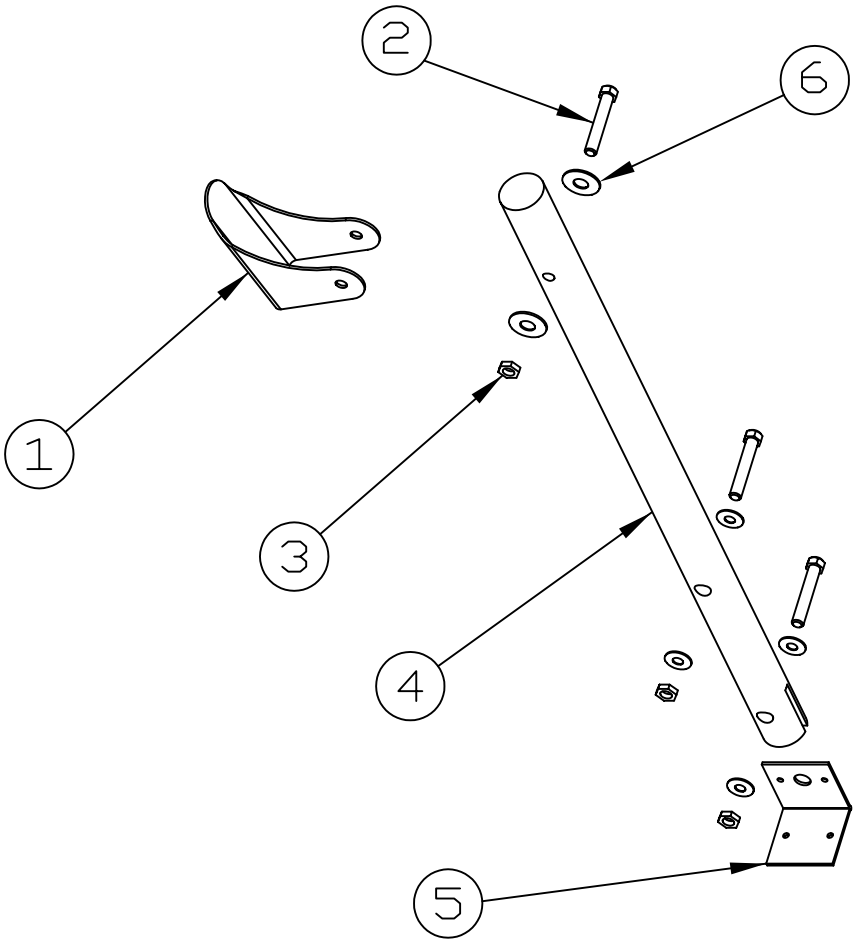

TOLERANCES:
UNLESS OTHERWISE SPECIFIED
DECIMAL: ±3mm
FRACTIONAL ±1/8
ANGULAR ±1°

DISCOVER HOVER ONE

© COPYRIGHT, WORLDHOVERCRAFT.ORG, 2004

DWG NAME: STEERING SUB-ASSEMBLY

SCALE: 0.250 | USED ON: 61 | ASSEMBLY NAME: CONTROL

MATERIAL:

DRAWN BY: M. Shima, D. Oelschlager, J. Schlottman, R. Wilson

QUANTITY: 1 | APPD BY: XXXXX | DWG NO. 56

DATE: JANUARY 2004

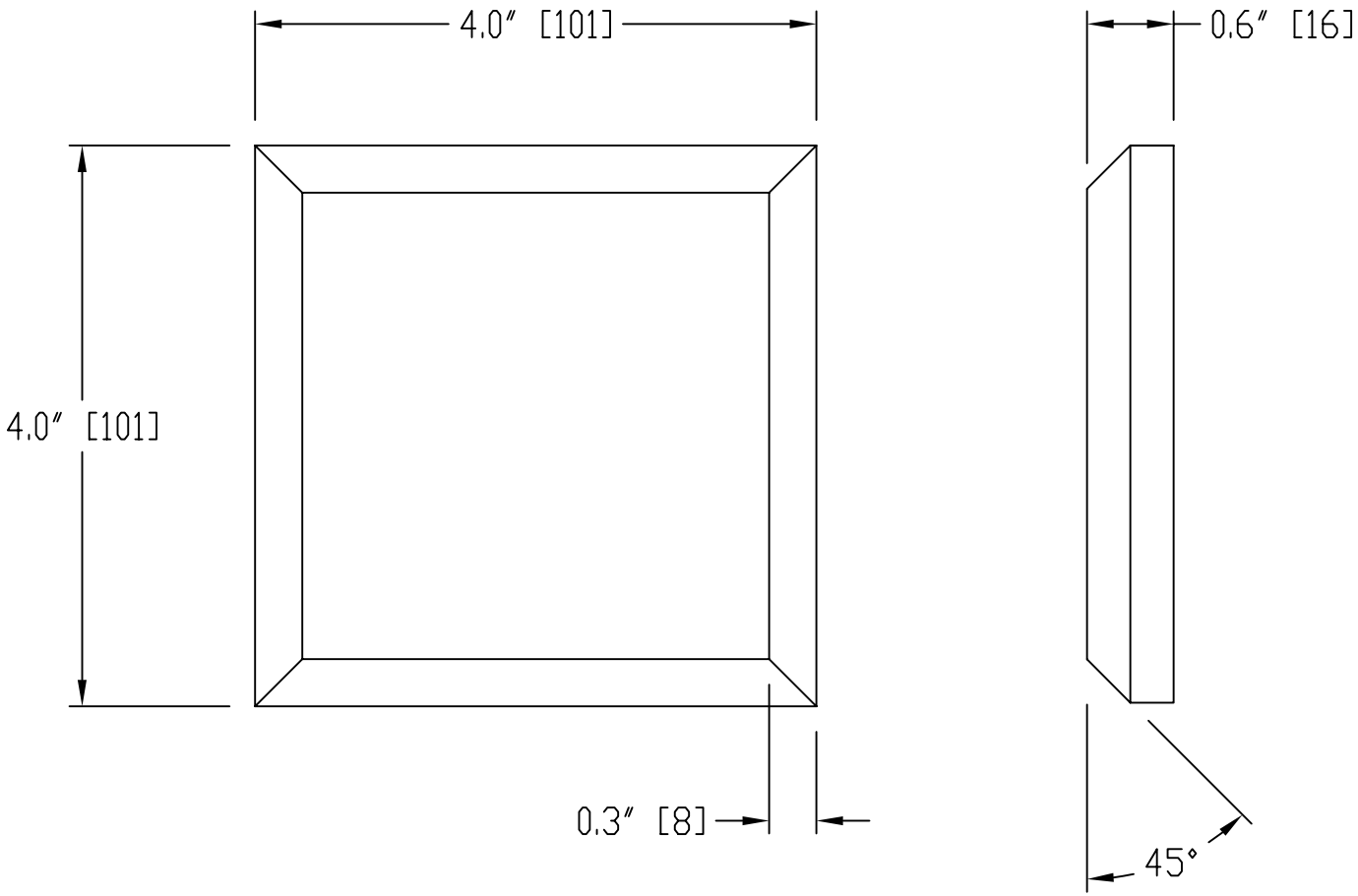

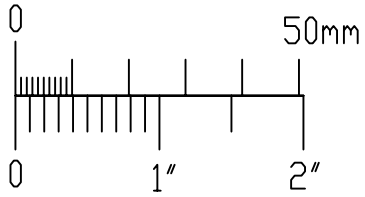

TOLERANCES:
UNLESS OTHERWISE SPECIFIED
DECIMAL: ±3mm
FRACTIONAL ±1/8
ANGULAR ±1°

DISCOVER HOVER ONE

© COPYRIGHT, WORLDHOVERCRAFT.ORG, 2004

DWG NAME:	STEERING BLOCK		
SCALE: AS SHOWN	USED ON: 70	ASSEMBLY NAME: HULL	
MATERIAL:	5/8″ [16mm] PINE 4″× 4″ [102×102]		
DRAWN BY:	M. Shima, D. Oelschlager, J. Schlottman, R. Wilson		
QUANTITY: 1	APPD BY: XXXXX		DWG NO. 57
DATE:	JANUARY 2004		

ITEM NO.	ITEM	QTY	PART NO.
1	1/16" [1.6mm] STAINLESS STEEL AIRCRAFT CABLE	268" [6807]	80

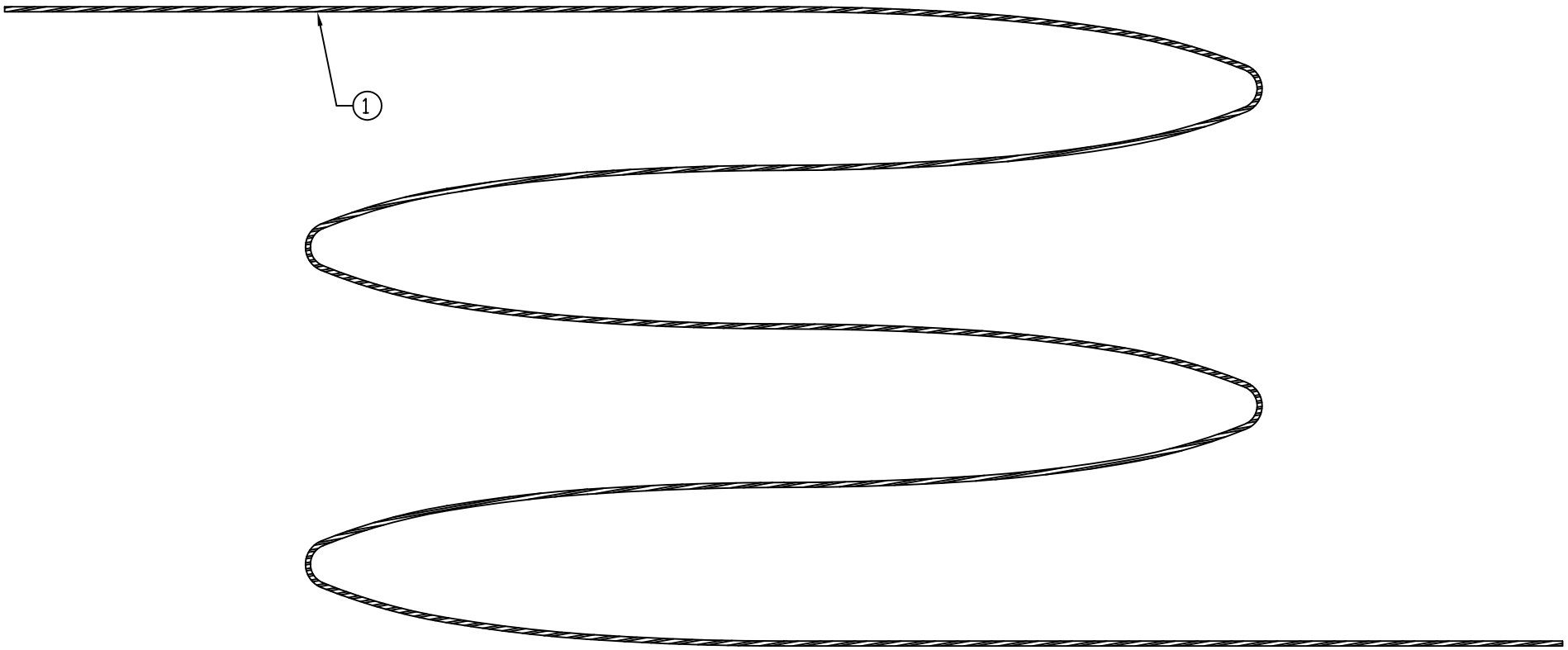

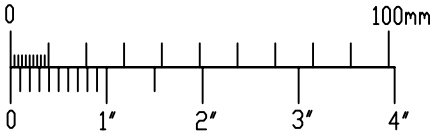

TOLERANCES:
UNLESS OTHERWISE SPECIFIED
DECIMAL: ±1mm
FRACTIONAL ±1/32"
ANGULAR ±1°

DISCOVER HOVER ONE

© COPYRIGHT, WORLDHOVERCRAFT.ORG, 2004

DWG NAME:	STEERING CABLE		
SCALE: AS SHOWN	USED ON: 61	ASSEMBLY NAME:	CONTROL
MATERIAL:	AS SHOWN		
DRAWN BY:	M. Shima, D. Oelschlager, J. Schlottman, R. Wilson		
QUANTITY: 1	APPD BY: XXXXX	DWG NO.	58
DATE:	JANUARY 2004		

ITEM NO.	ITEM	QTY	PART NO.
1	FERRULE	2	68
2	1/16" [1.6] STAINLESS STEEL AIRCRAFT CABLE	96" [2438]	80
3	BLACK CASING	92" [2337]	79
4	OIL	0.05 ml	78

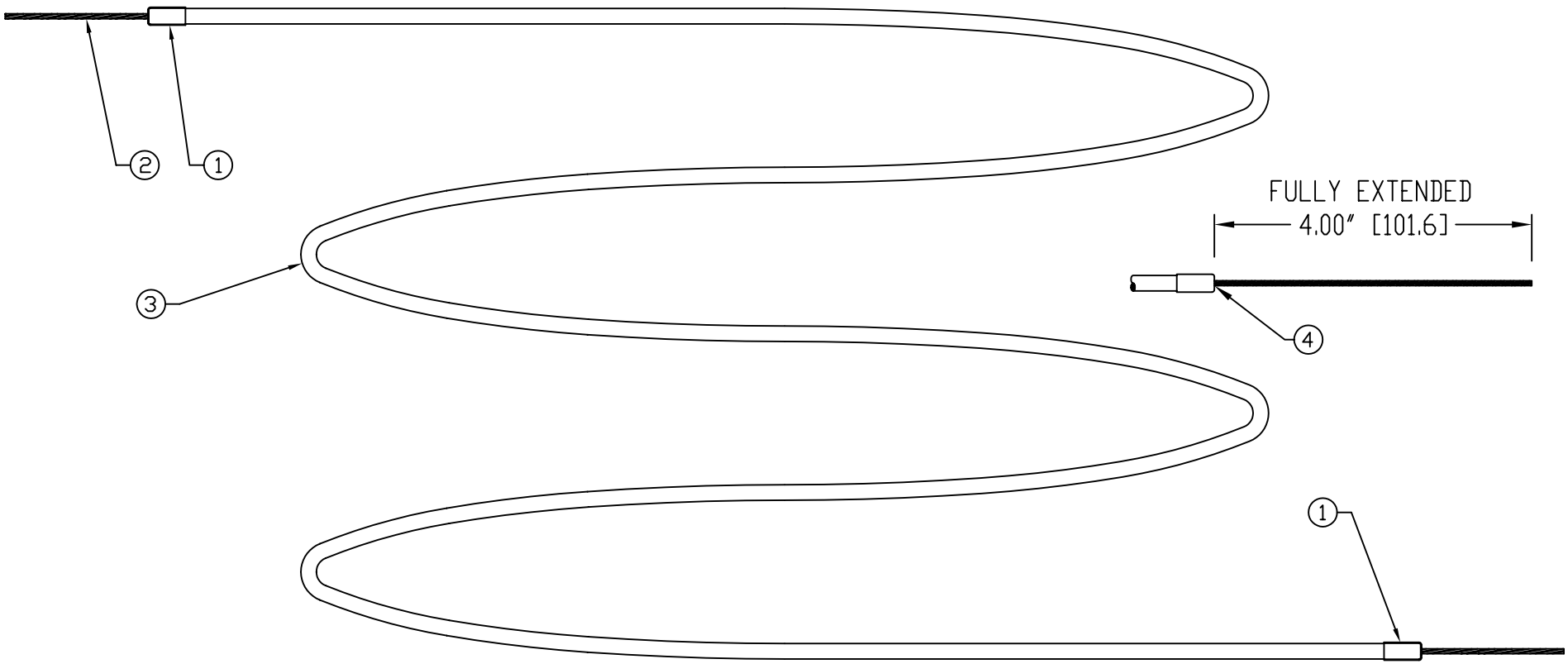

NOTE- (1) CUT CASING 92" [2337] LONG & DEBURR.
(2) CUT CABLE 96" [2438] LONG.
(3) CRIMP CAPS ON CASING WITH PLIERS
FIT CABLE IN CASING WITH OR OIL 78.
(4) TIN CABLE ENDS USING SOLDER AND
PHOSPHORIC ACID FLUX.
(5) MEASURE CABLE WHEN STRETCHED OUT IN
A STRAIGHT LINE
EXTENDED & ASSY. FLAT.

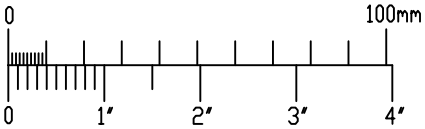

TOLERANCES: UNLESS OTHERWISE SPECIFIED
DECIMAL: ±1mm
FRACTIONAL ±1/32"
ANGULAR ±1°

DISCOVER HOVER ONE

© COPYRIGHT, WORLDHOVERCRAFT.ORG, 2004

DWG NAME: THROTTLE CABLE

SCALE: AS SHOWN | USED ON: 61 | ASSEMBLY NAME: CONTROL

MATERIAL: AS SHOWN

DRAWN BY: M. Shima, D. Oelschlager, J. Schlottman, R. Wilson

QUANTITY: 1 | APPD BY: XXXXX | DWG NO. 59

DATE: JANUARY 2004

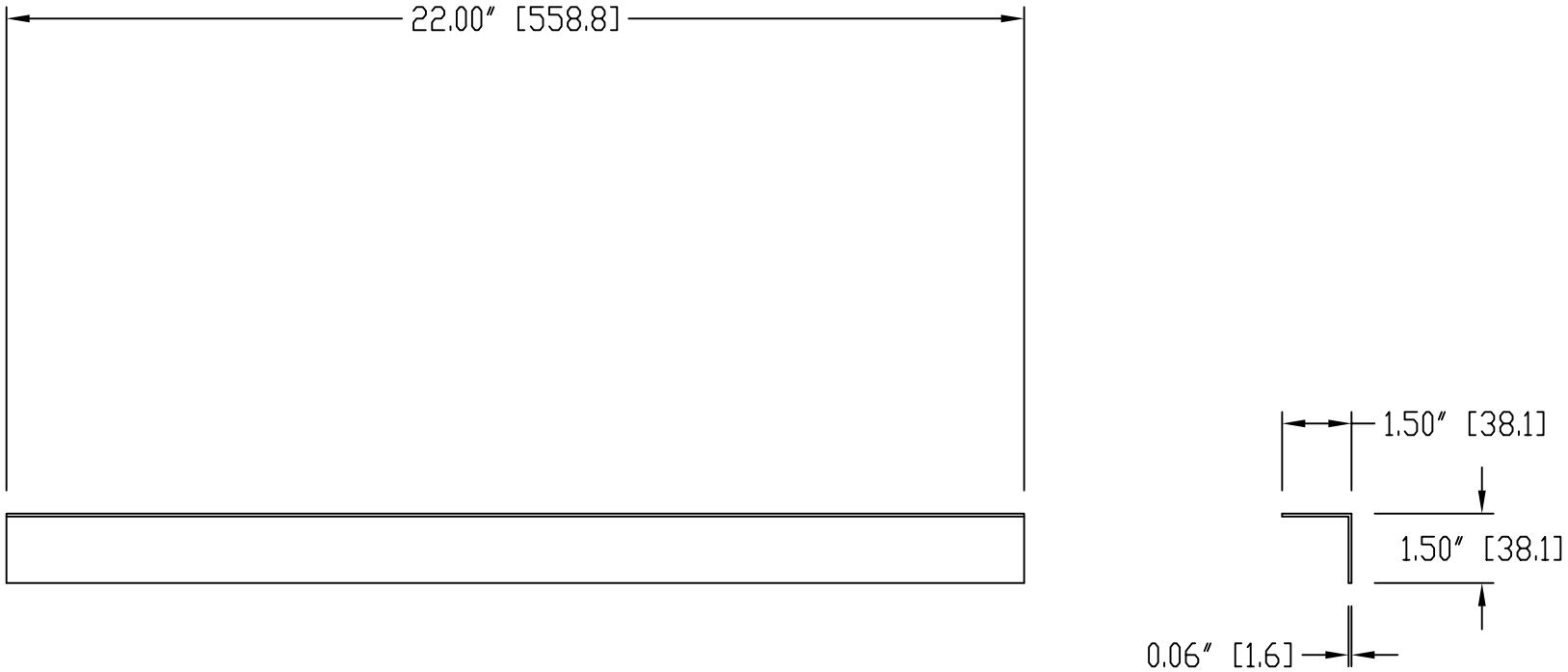

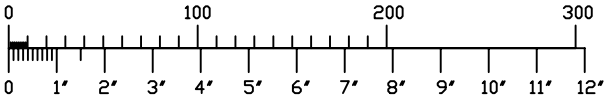

TOLERANCES:
UNLESS OTHERWISE SPECIFIED
DECIMAL: ±1mm
FRACTIONAL ±1/32″
ANGULAR ±1°

DISCOVER HOVER ONE

© COPYRIGHT, WORLDHOVERCRAFT.ORG, 2004

DWG NAME:	FRONT ATTACHMENT		
SCALE: AS SHOWN	USED ON: 51	ASSEMBLY NAME: BODY	
MATERIAL:	ALUMINUM ANGLE 22″x 1.5″x 1.5″x 1/16″ [559x38x38x1.6]		
DRAWN BY:	M. Shima, D. Oelschlager, J. Schlottman, R. Wilson		
QUANTITY: 1	APPD BY: XXXXX	DWG NO. 60	
DATE:	JANUARY 2004		

ITEM NO.	ITEM	QTY	PART NO.
1	RUDDER SUB-ASSEMBLY	1	47
2	STEERING SUB-ASSEMBLY	2	56
3	THROTTLE CABLE	1	59
4	STEERING CABLE	1	58
5	PULLEY	4	98
6	STEERING BLOCK	1	57
7	#6 x 1/2 [M3.5 x 13] SCREWS	2	82

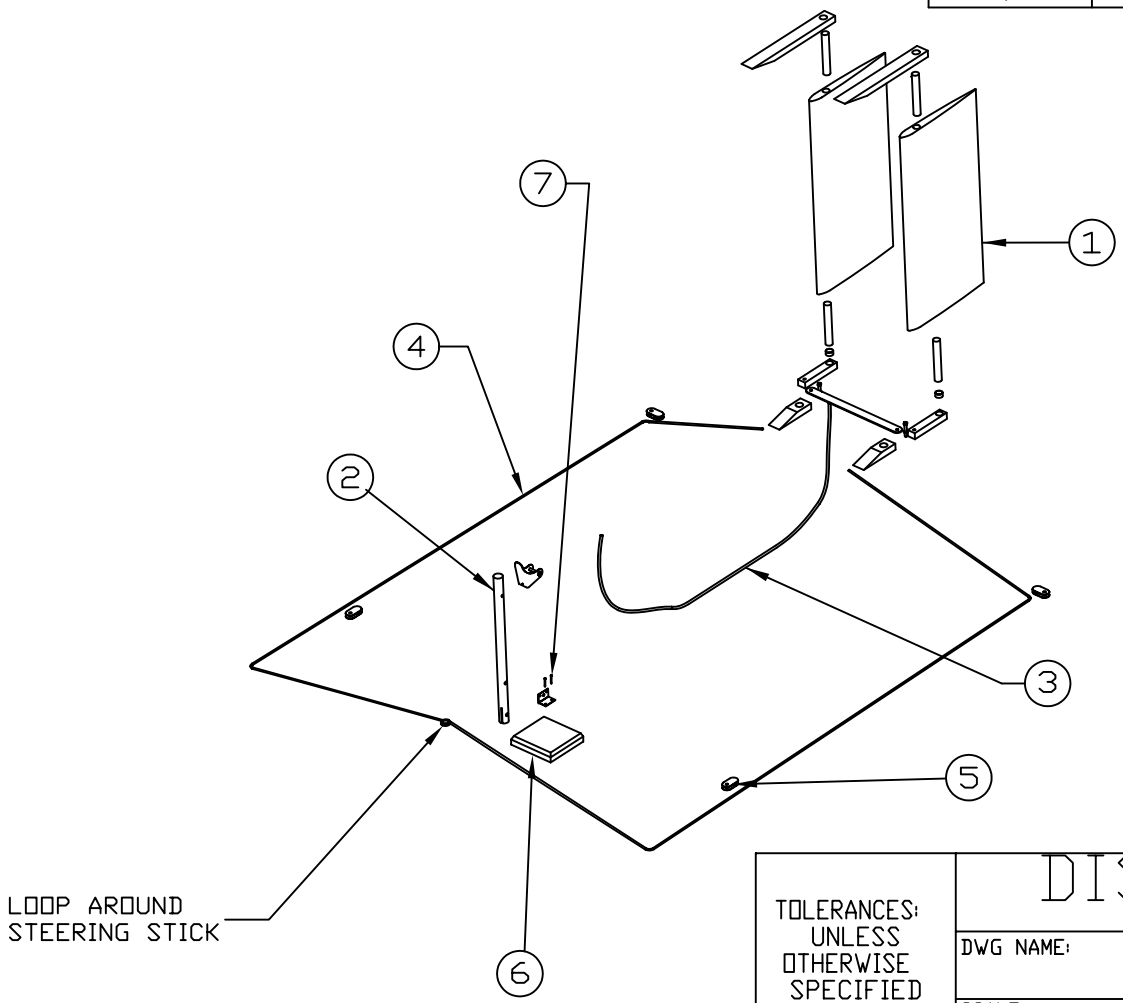

TOLERANCES:
UNLESS OTHERWISE SPECIFIED
DECIMAL: ±3mm
FRACTIONAL ±1/8
ANGULAR ±1°

DISCOVER HOVER ONE

© COPYRIGHT, WORLDHOVERCRAFT.ORG, 2004

DWG NAME: CONTROL ASSEMBLY

SCALE:

USED ON: 70

ASSEMBLY NAME: HOVERCRAFT

MATERIAL:

DRAWN BY: M. Shima, D. Oelschlager, J. Schlottman, R. Wilson

QUANTITY: 1

APPD BY: XXXXX

DWG NO. 61

DATE: JANUARY 2004

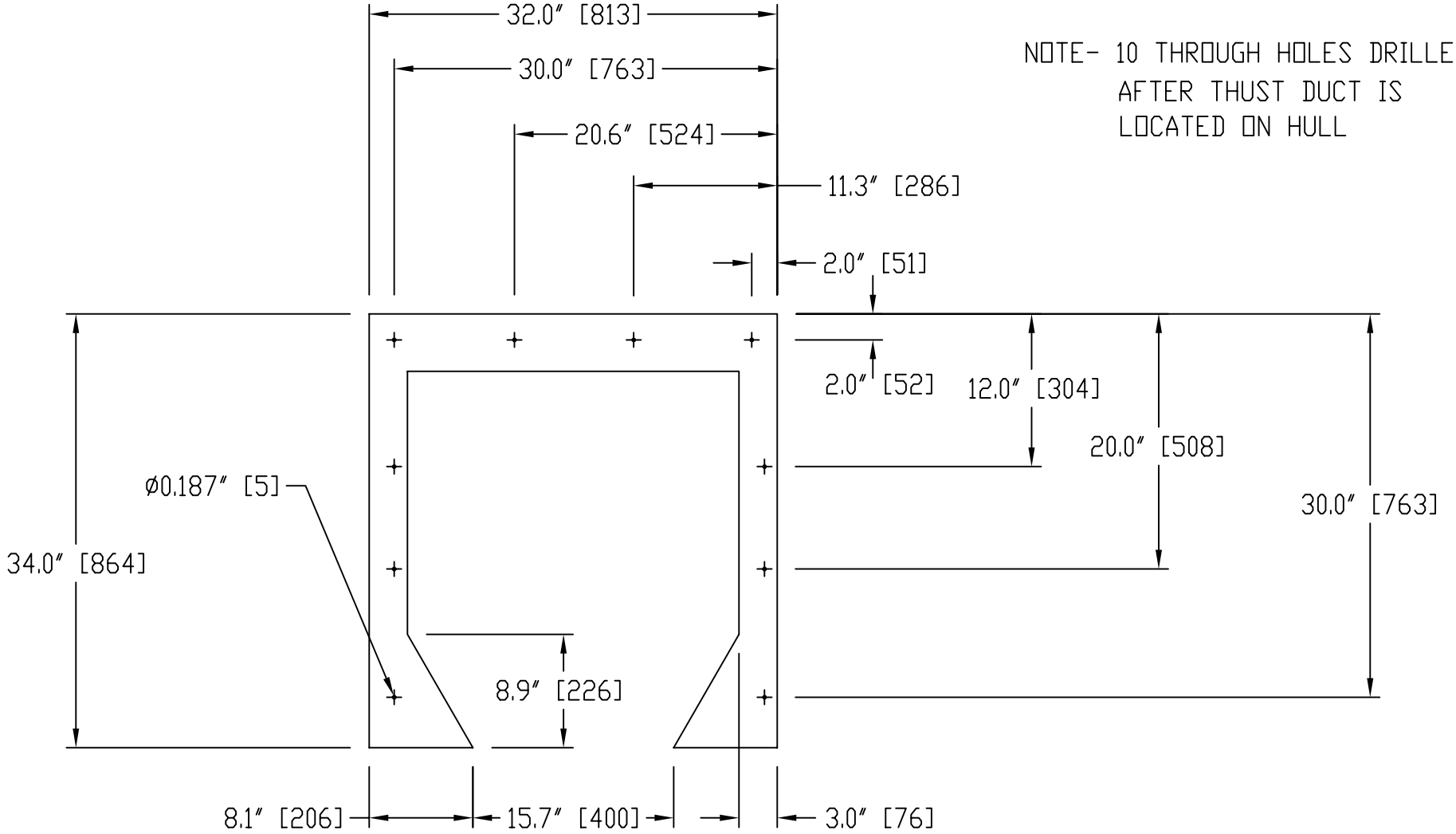

NOTE- 10 THROUGH HOLES DRILLED AFTER THUST DUCT IS LOCATED ON HULL

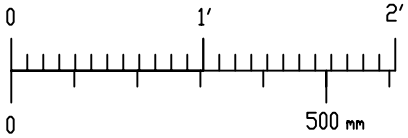

TOLERANCES: UNLESS OTHERWISE SPECIFIED
DECIMAL: ±3mm
FRACTIONAL ±1/8
ANGULAR ±1°

DISCOVER HOVER ONE

© COPYRIGHT, WORLDHOVERCRAFT.ORG, 2004

DWG NAME:	DUCT BASE		
SCALE: AS SHOWN	USED ON: 48	ASSEMBLY NAME: DUCT	
MATERIAL: 1/8″ [3mm]PLYWOOD 34″x 32″ [864x813]			
DRAWN BY: M. Shima, D. Oelschlager, J. Schlottman, R. Wilson			
QUANTITY: 1	APPD BY: XXXXX		DWG NO. 63
DATE: JANUARY 2004			

X″	0	1.0	2.0	3.0	4.0	5.0	6.0	7.0	8.0	9.0	10.0	11.0	12.0	13.0	14.0	15.0	16.0	17.0	18.0	19.0	20.0	21.0	22.0	23.0	24.0	25.0	26.0	27.0	28.0	29.0	30.0
Xmm	0	25	51	76	102	127	152	178	203	229	254	279	305	330	356	381	406	432	457	483	508	533	559	584	610	635	660	686	711	737	762
Y″	0	0.5	1.0	1.6	2.2	2.9	3.6	4.3	5.0	5.7	6.4	7.1	7.8	8.6	9.2	9.9	10.6	11.3	11.9	12.4	12.9	13.2	13.4	13.4	13.3	13.1	12.9	12.4	11.9	11.2	10.6
Ymm	0	13	25	41	56	74	91	109	127	145	163	180	198	218	234	251	269	287	302	316	328	335	340	341	339	334	327	315	302	285	268

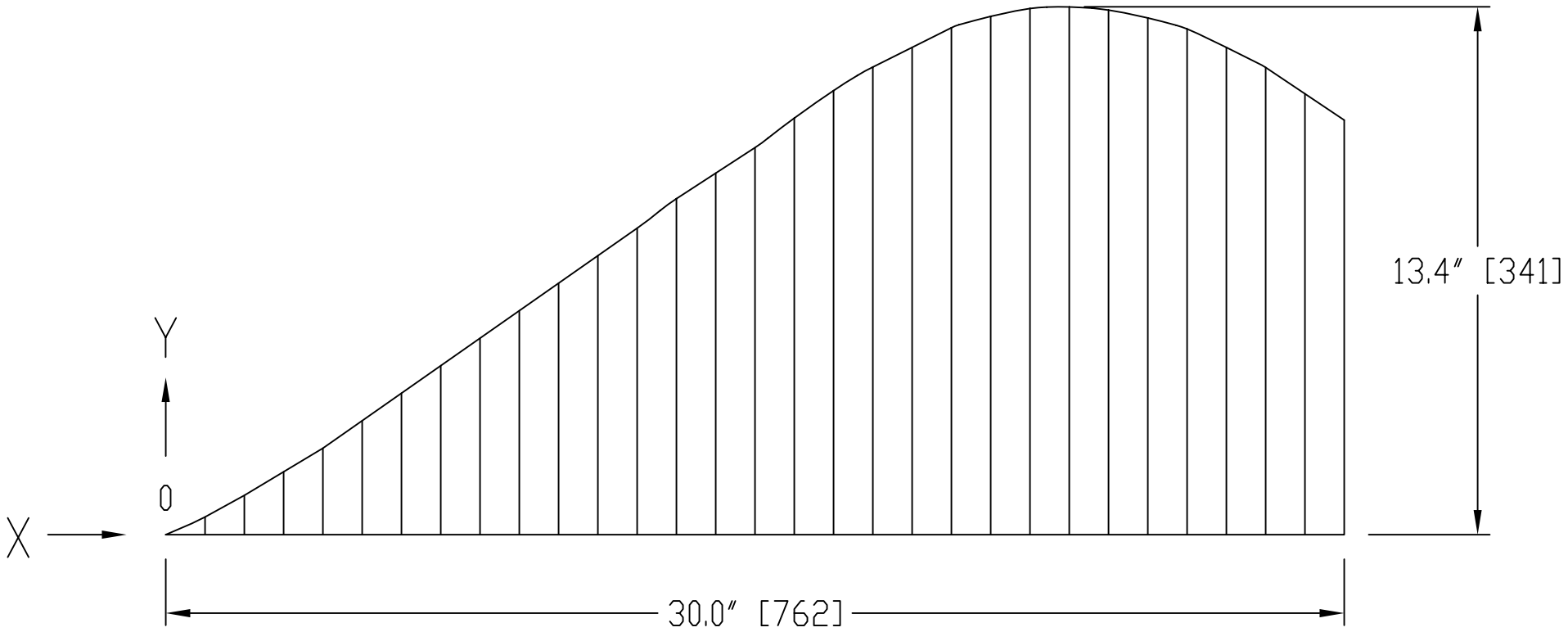

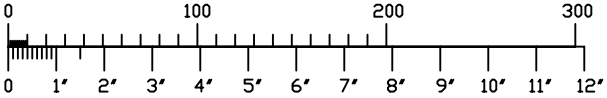

TOLERANCES:
UNLESS
OTHERWISE
SPECIFIED
DECIMAL:
±1.6mm
FRACTIONAL
±1/16″
ANGULAR
±1°

DISCOVER HOVER ONE

© COPYRIGHT, WORLDHOVERCRAFT.ORG, 2004

DWG NAME: SKIRT CORNER

SCALE: AS SHOWN | USED ON: 66&67 | ASSEMBLY NAME: SKIRT

MATERIAL:

DRAWN BY: M. Shima, D. Oelschlager, J. Schlottman, R. Wilson

QUANTITY: REF | APPD BY: XXXXX | DWG NO. 64

DATE: APRIL, 2004

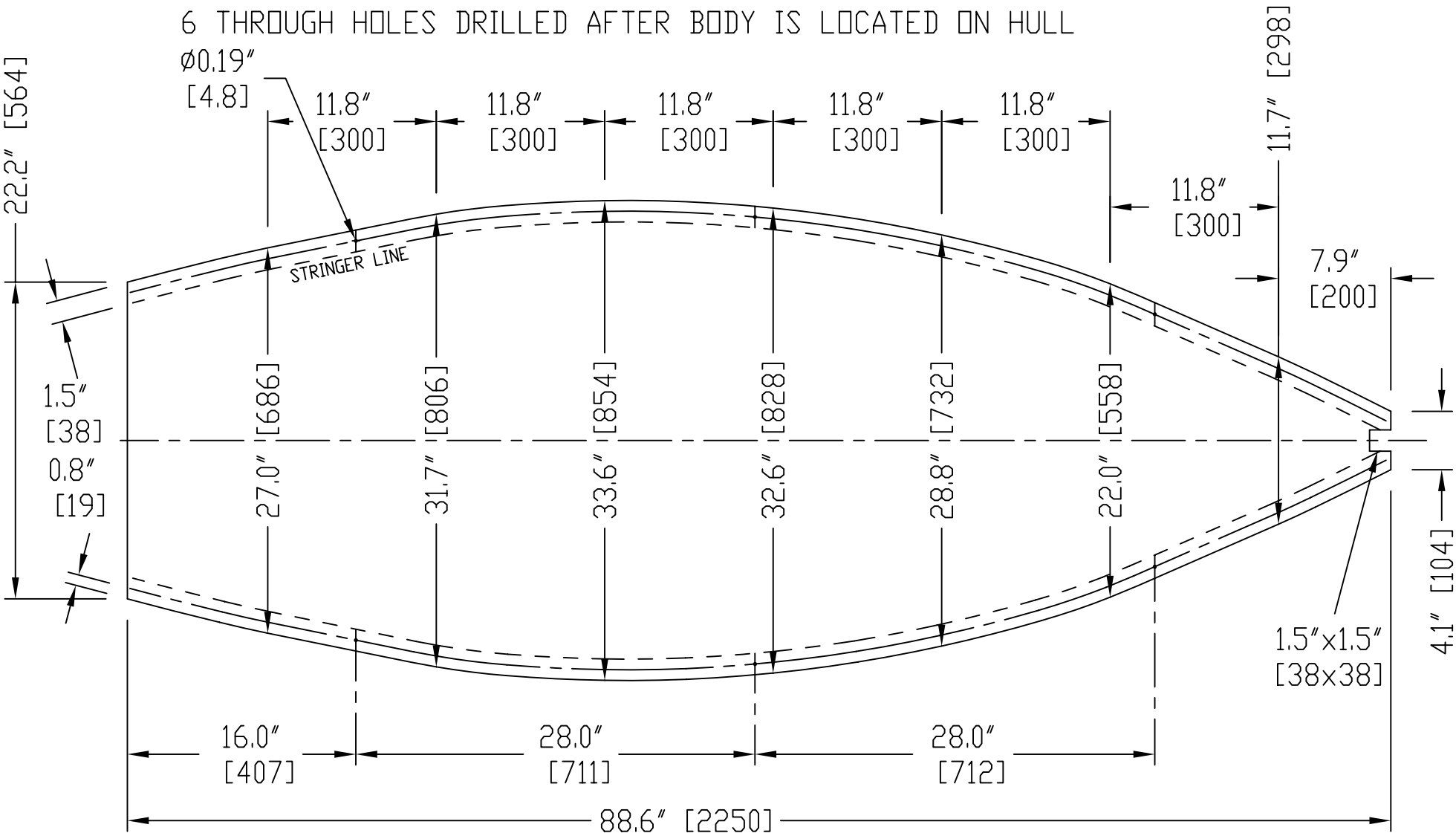

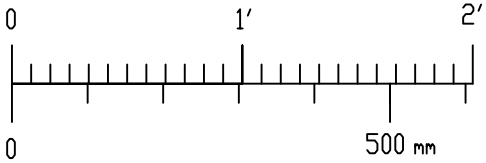

TOLERANCES: UNLESS OTHERWISE SPECIFIED
DECIMAL: ±1.6mm
FRACTIONAL ±1/16″
ANGULAR ±1°

DISCOVER HOVER ONE

© COPYRIGHT, WORLDHOVERCRAFT.ORG, 2004

DWG NAME:	BODY BASE		
SCALE: AS SHOWN	USED ON: 51	ASSEMBLY NAME: BODY	
MATERIAL: 1/4″ [6.4mm] PLYWOOD 88.6″x 33.6″ [2250x854]			
DRAWN BY: M. Shima, D. Oelschlager, J. Schlottman, R. Wilson			
QUANTITY: 1	APPD BY: XXXXX	DWG NO. 65	
DATE: APRIL, 2004			

NOTE- LENGTH DIMENSION IS 2″ [50.8] LONGER THAN ATTACHMENT STRIP'S ACTUAL SIZE

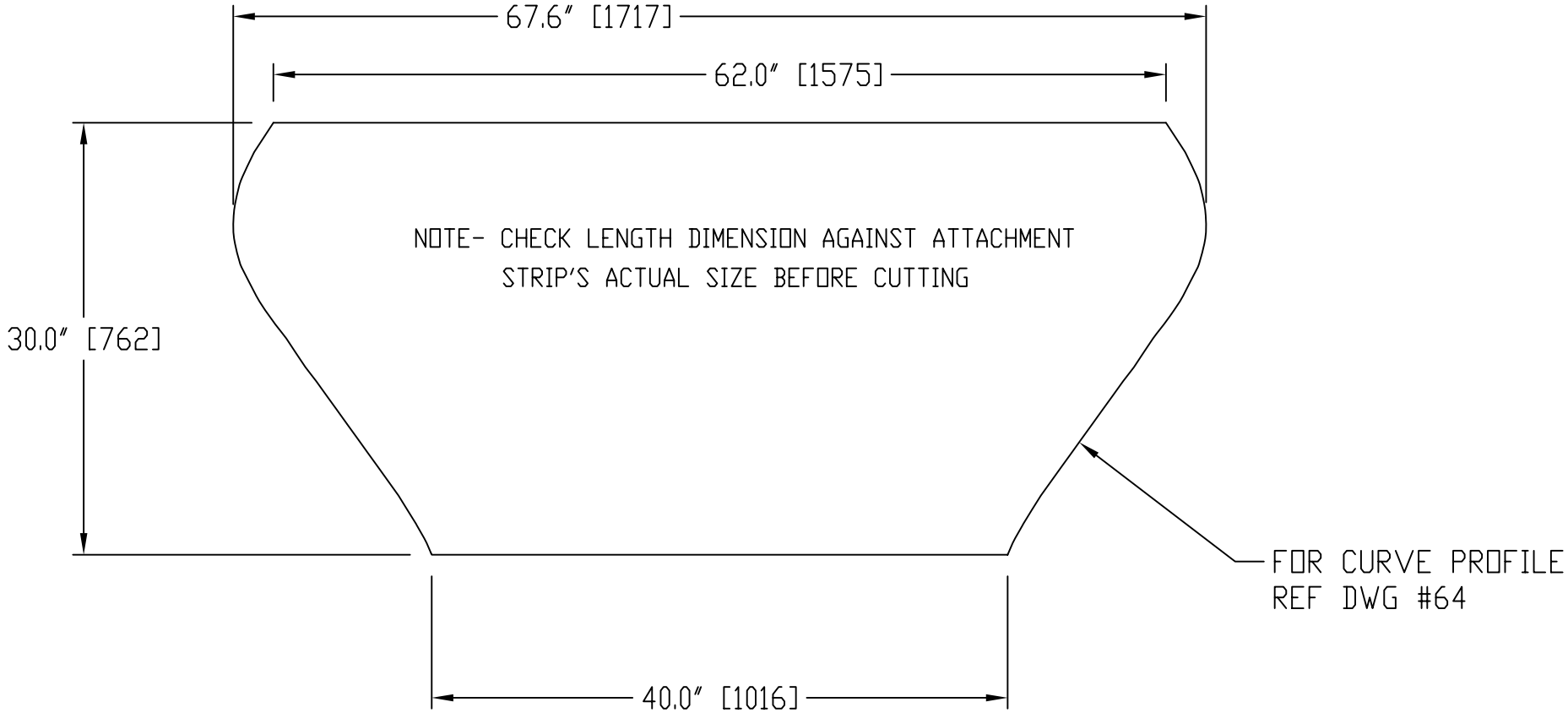

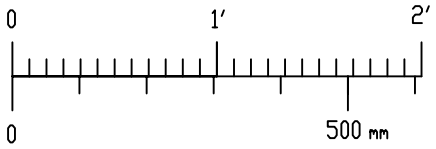

TOLERANCES: UNLESS OTHERWISE SPECIFIED DECIMAL: ±3mm FRACTIONAL ±1/8 ANGULAR ±1°	DISCOVER HOVER ONE		
	© COPYRIGHT, WORLDHOVERCRAFT.ORG, 2004		
	DWG NAME: SKIRT (FRONT)		
	SCALE: AS SHOWN	USED ON: 50	ASSEMBLY NAME: HULL
	MATERIAL: NEOPRENE OR VINYL COATED NYLON 12-18oz./sq.yd. [407-610gm./sq.m.]		
	DRAWN BY: M. Shima, D. Oelschlager, J. Schlottman, R. Wilson		
	QUANTITY: 1	APPD BY: XXXXX	DWG NO. 66
	DATE: APRIL, 2004		

NOTE- LENGTH DIMENSION IS 1" [50.8] LONGER THAN ATTACHMENT STRIP'S ACTUAL SIZE

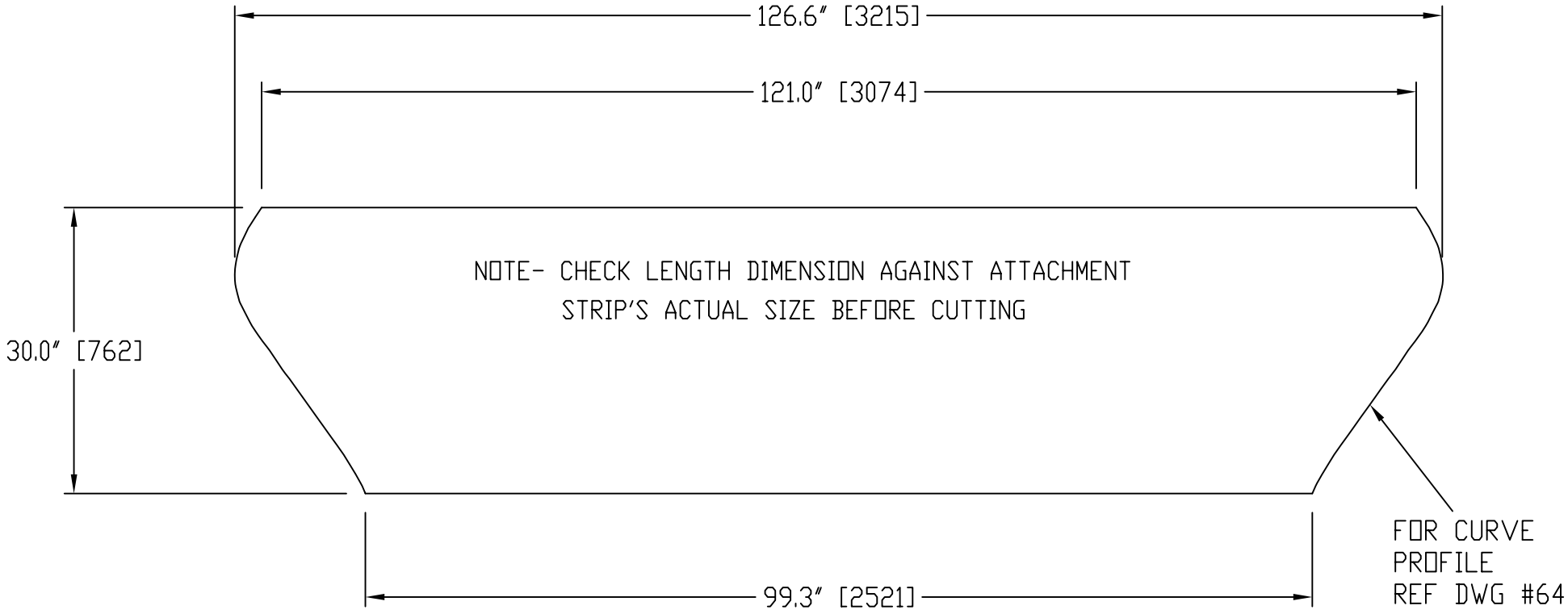

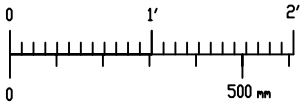

TOLERANCES: UNLESS OTHERWISE SPECIFIED
DECIMAL: ±3mm
FRACTIONAL ±1/8
ANGULAR ±1°

DISCOVER HOVER ONE

© COPYRIGHT, WORLDHOVERCRAFT.ORG, 2004

DWG NAME:	SKIRT (SIDE)		
SCALE: AS SHOWN	USED ON: 50	ASSEMBLY NAME:	HULL
MATERIAL:	NEOPRENE OR VINYL COATED NYLON 12-18oz./sq.yd. [407-610gm./sq.m.]		
DRAWN BY:	M. Shima, D. Oelschlager, J. Schlottman, R. Wilson		
QUANTITY: 1	APPD BY: XXXXX	DWG NO.	67
DATE:	APRIL, 2004		

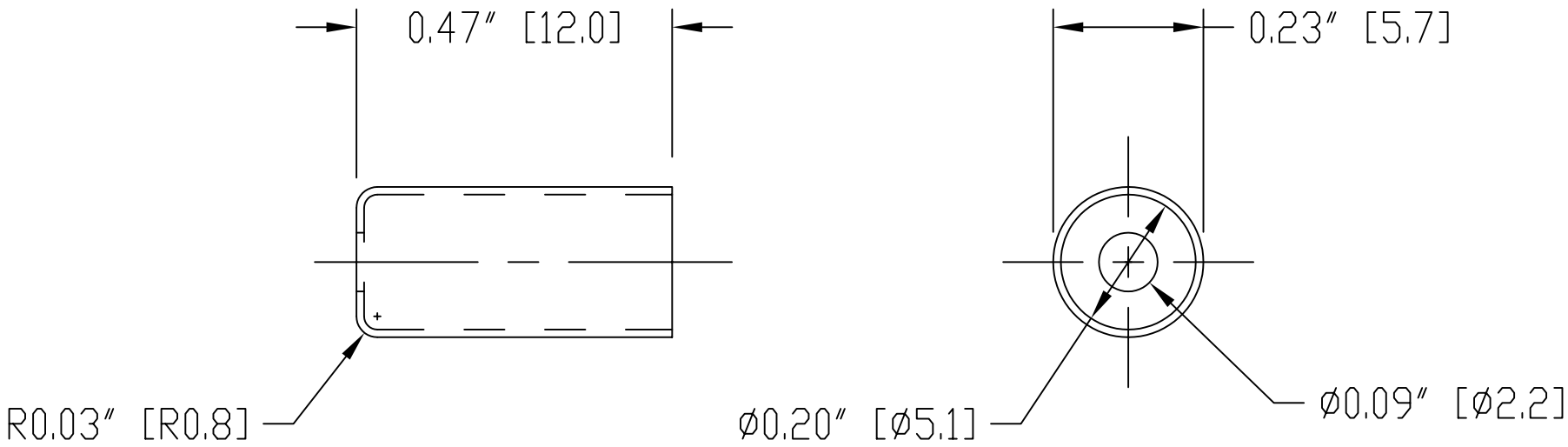

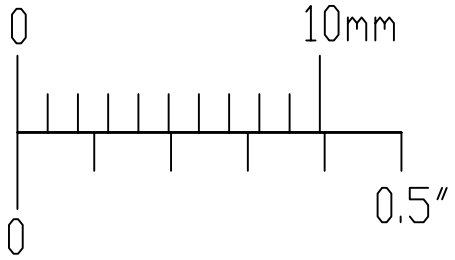

TOLERANCES: UNLESS OTHERWISE SPECIFIED
DECIMAL: ±0.4mm
FRACTIONAL ±1/64″
ANGULAR ±1°

DISCOVER HOVER ONE

© COPYRIGHT, WORLDHOVERCRAFT.ORG, 2004

DWG NAME:	FERRULE		
SCALE: AS SHOWN	USED ON: 59	ASSEMBLY NAME: THROTTLE CABLE	
MATERIAL:	PURCHASED ITEM		
DRAWN BY:	M. Shima, D. Oelschlager, J. Schlottman, R. Wilson		
QUANTITY: 1	APPD BY: XXXXX	DWG NO. 68	
DATE:	JANUARY 2004		

NOTE- LENGTH DIMENSION IS THE SAME LENGTH AS THE ATTACHMENT STRIP'S ACTUAL SIZE

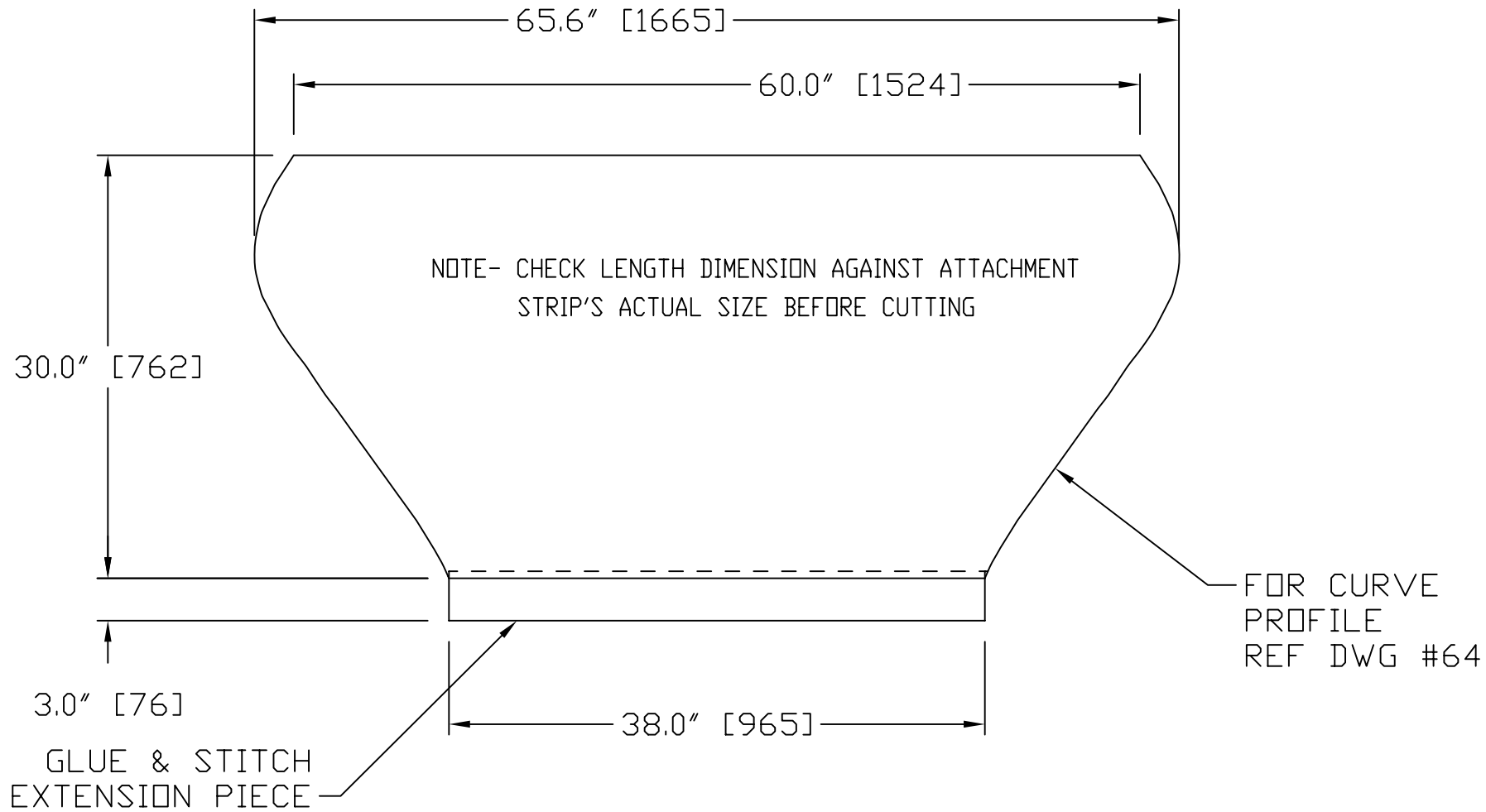

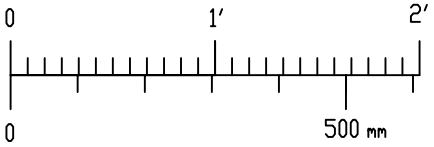

TOLERANCES: UNLESS OTHERWISE SPECIFIED
DECIMAL: ±3mm
FRACTIONAL ±1/8
ANGULAR ±1°

DISCOVER HOVER ONE

© COPYRIGHT, WORLDHOVERCRAFT.ORG, 2004

DWG NAME:	SKIRT (REAR)		
SCALE: AS SHOWN	USED ON: 50	ASSEMBLY NAME: HULL	
MATERIAL:	NEOPRENE OR VINYL COATED NYLON 12-18oz./sq.yd. [407-610gm./sq.m.]		
DRAWN BY:	M. Shima, D. Oelschlager, J. Schlottman, R. Wilson		
QUANTITY: 1	APPD BY: XXXXX	DWG NO. 69	
DATE:	APRIL 2004		

ITEM NO.	ITEM	QTY	PART NO.
1	HULL ASSEMBLY	1	50
2	THRUST DUCT ASSY.	1	48
3	CONTROL ASSEMBLY	1	61
4	BODY ASSEMBLY	1	51
5	OPITIONAL HANDLE	4	52
6	BOLT 8-32 x 3 [M4 x 0.07 x 76]	16	104
7	1/8 [3mm] PYLWOOD WASHER 3 x 3 [76 x 76]	16	
8	FENDER WASHER	16	85
9	NUT 8-32 [M4 x 0.07]	16	105
10	1 5/8 DRY WALL SCREWS	4	88
11	PULLEY WEDGE	4	101

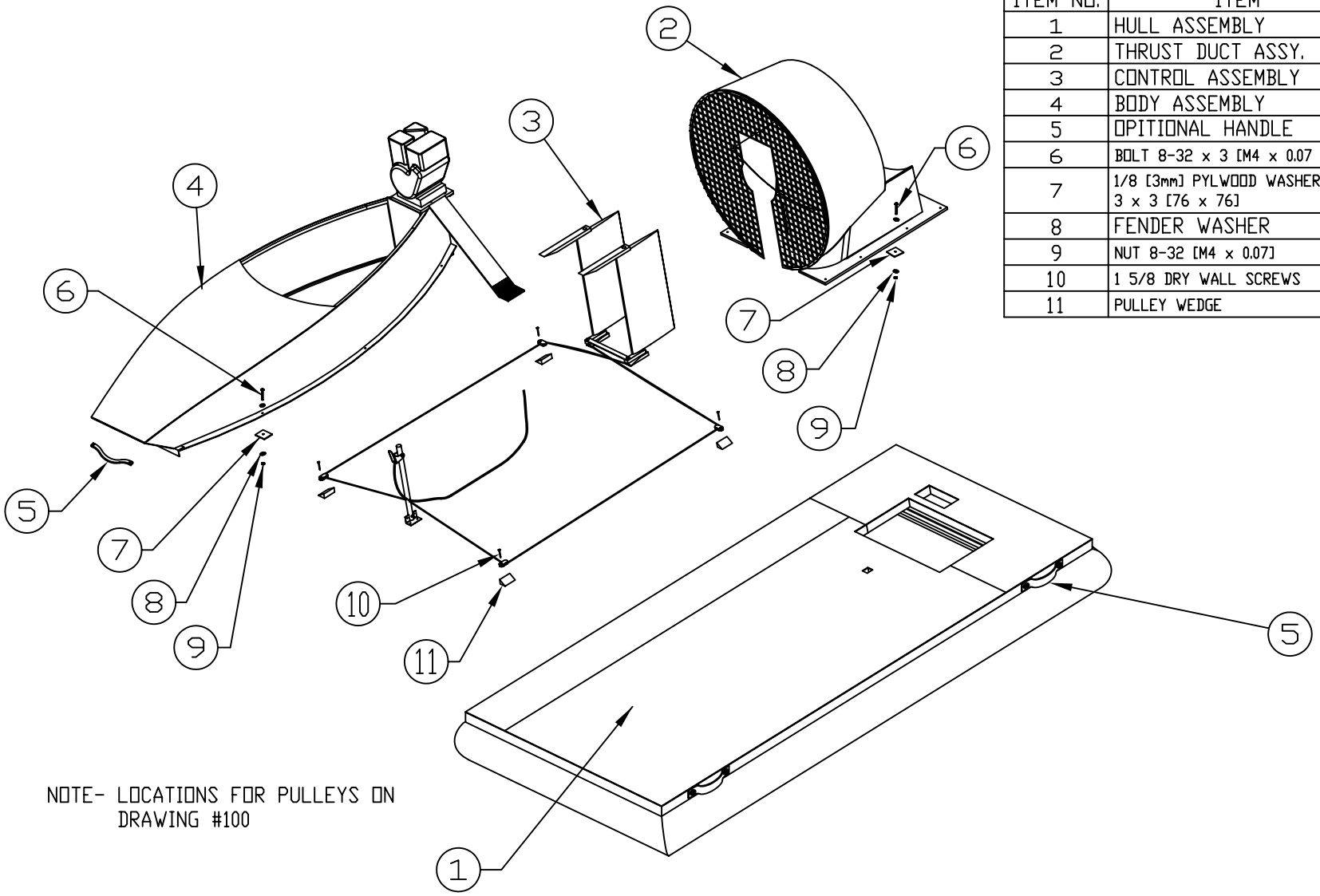

NOTE- LOCATIONS FOR PULLEYS ON DRAWING #100

TOLERANCES: UNLESS OTHERWISE SPECIFIED
DECIMAL: ±3mm
FRACTIONAL ±1/8
ANGULAR ±1°

DISCOVER HOVER ONE

© COPYRIGHT, WORLDHOVERCRAFT.ORG, 2004

DWG NAME: HOVERCRAFT ASSEMBLY EXPLODED

SCALE: 0.040 | USED ON: | ASSEMBLY NAME:

MATERIAL:

DRAWN BY: M. Shima, D. Oelschlager, J. Schlottman, R. Wilson

QUANTITY: 1 | APPD BY: XXXXX | DWG NO. 70

DATE: JANUARY 2004

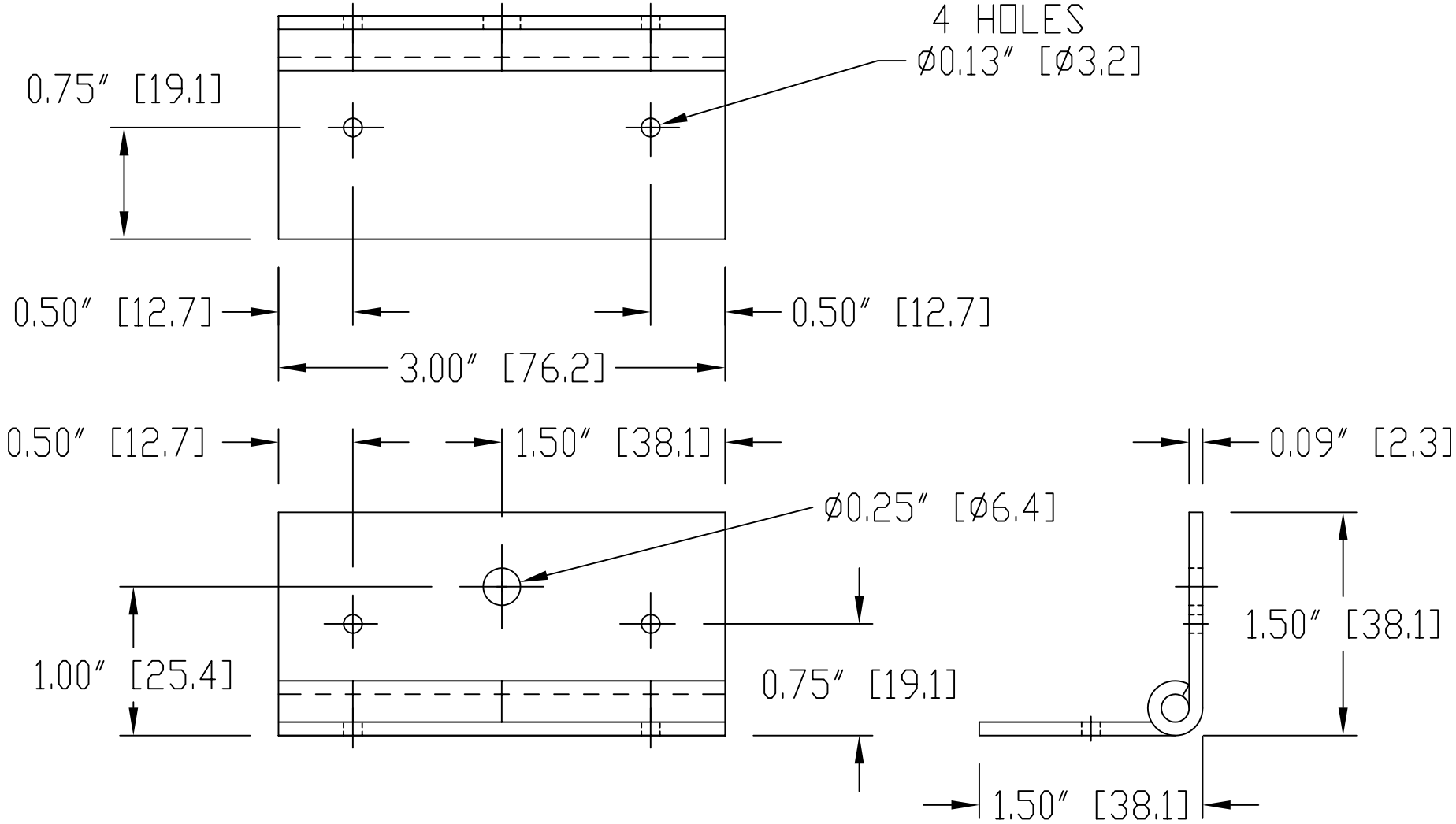

0 20mm

0 1″

TOLERANCES: UNLESS OTHERWISE SPECIFIED
DECIMAL: ±0.8mm
FRACTIONAL ±1/32″
ANGULAR ±1°

DISCOVER HOVER ONE

© COPYRIGHT, WORLDHOVERCRAFT.ORG, 2004

DWG NAME:	PURCHASED HINGE		
SCALE: AS SHOWN	USED ON: 61	ASSEMBLY NAME: STEERING STICK SUB	
MATERIAL:	STANDARD		
DRAWN BY:	M. Shima, D. Oelschlager, J. Schlottman, R. Wilson		
QUANTITY: 1	APPD BY: XXXXX	DWG NO. 76	
DATE:	JANUARY 2004		

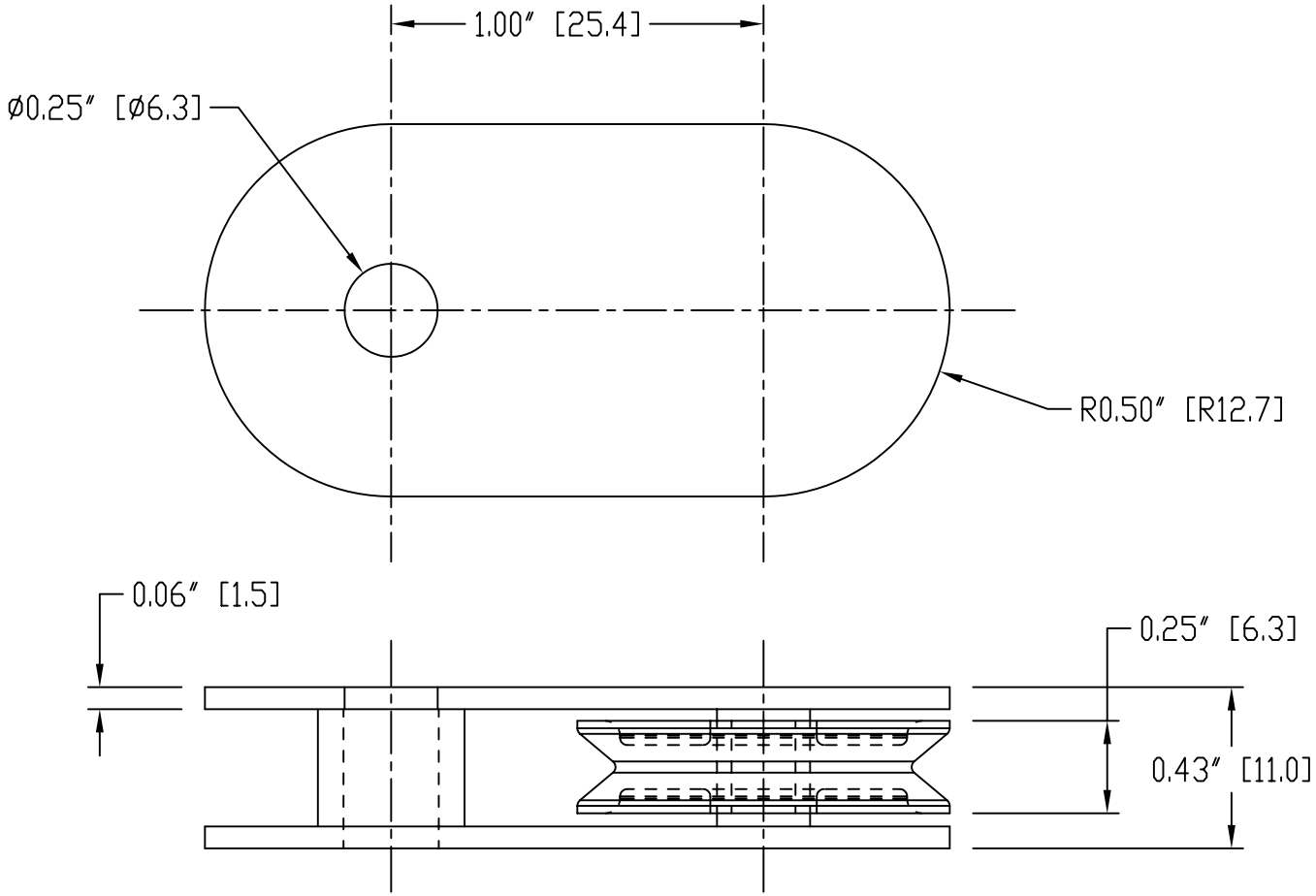

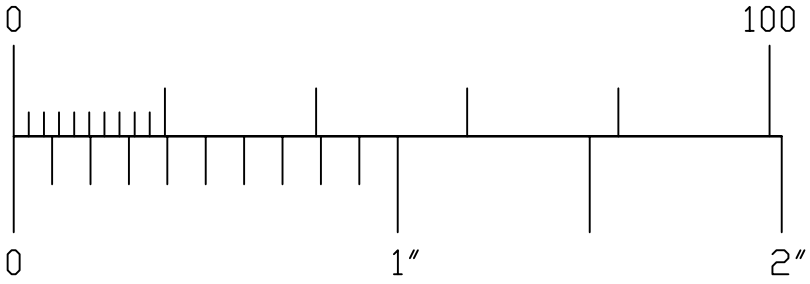

TOLERANCES: UNLESS OTHERWISE SPECIFIED
DECIMAL: ±1mm
FRACTIONAL ±1/32″
ANGULAR ±1°

DISCOVER HOVER ONE

© COPYRIGHT, WORLDHOVERCRAFT.ORG, 2004

DWG NAME:	PULLEY		
SCALE: AS SHOWN	USED ON: 61	ASSEMBLY NAME: CONTROLS	
MATERIAL:	PURCHASED PULLEY		
DRAWN BY:	M. Shima, D. Oelschlager, J. Schlottman, R. Wilson		
QUANTITY: 1	APPD BY: XXXXX	DWG NO. 98	
DATE:	JANUARY 2004		

ITEM NO.	ITEM	QTY	PART NO.
1	HOVERCRAFT ASSEMBLY EXPLODED	1	70

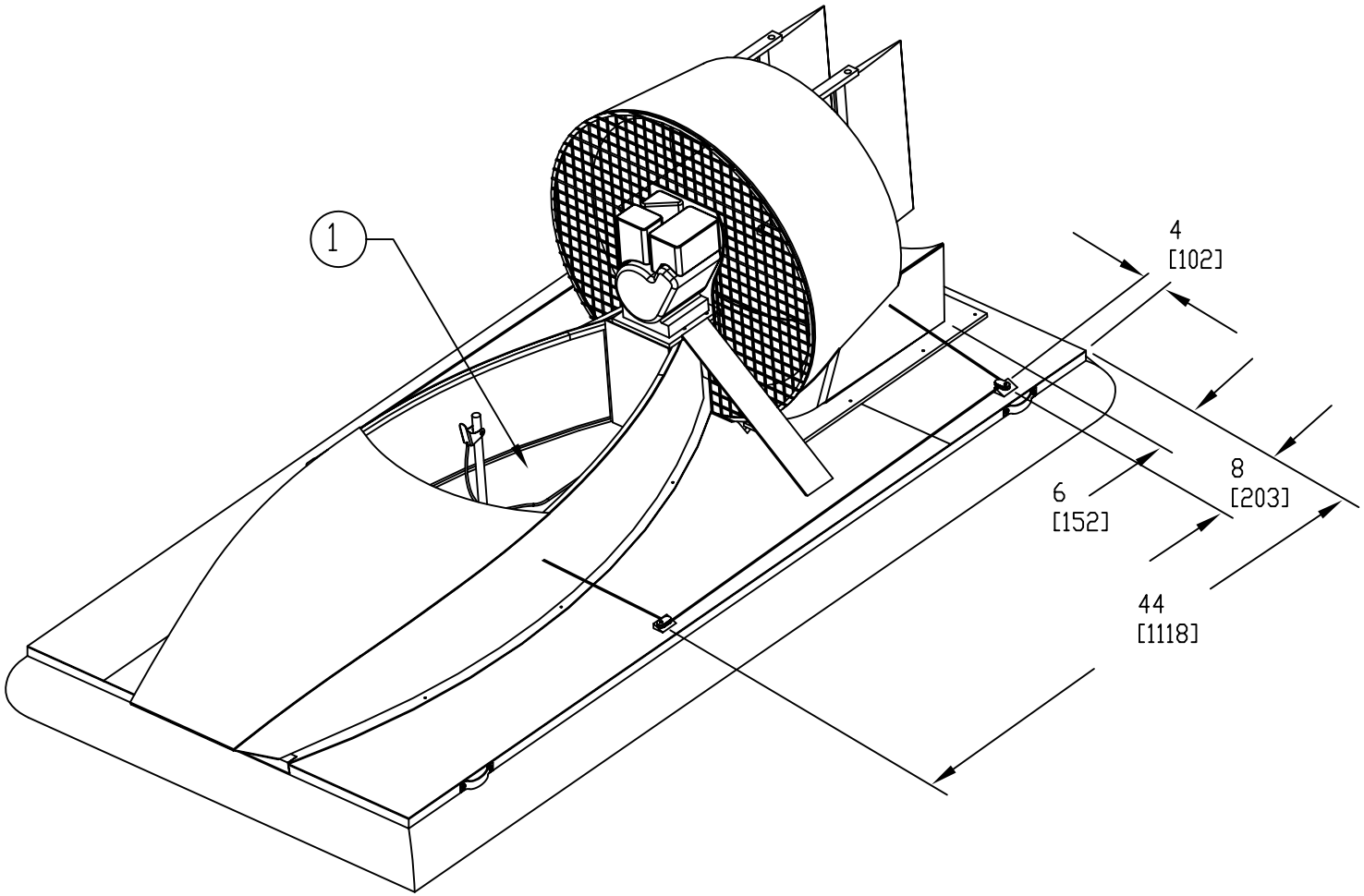

TOLERANCES:
UNLESS OTHERWISE SPECIFIED
DECIMAL: ±3mm
FRACTIONAL ±1/8
ANGULAR ±1°

DISCOVER HOVER ONE

© COPYRIGHT, WORLDHOVERCRAFT.ORG, 2004

DWG NAME: HOVERCRAFT ASSEMBLY

SCALE: | USED ON: | ASSEMBLY NAME:

MATERIAL:

DRAWN BY: M. Shima, D. Oelschlager, J. Schlottman, R. Wilson

QUANTITY: 1 | APPD BY: XXXXX | DWG NO. 100

DATE: JANUARY 2004