SERIES V4 | W.E. ANDERSON FLOTECT® VANE OPERATED FLOW SWITCH



FEATURES/BENEFITS

- **Unique magnetically actuated switching design gives superior performance**
- **Features a free-swinging vane which attracts a magnet within the solid metal switch body, actuating a snap switch by means of a simple lever arm with no bellows, springs, or seals to fail**
- **Leak proof body machined from bar stock**
- **Electrical assembly can be easily replaced without removing the unit from installation so that the process does not have to \ be shut down**
- **Installs directly and easily into pipeline with a thredolet, tee, or flange (see application drawings)**
- **High pressure rating of 1000 psig (69 bar) with the brass body and 2000 psig (138 bar) with the 316 SS body**
- **Choice of custom vane calibrated for your application, Model V4, or field adjustable multilayer vane, Model V4-2-U (see set point chart)**

APPLICATIONS

- Protects pumps, motors and other equipment against low or no flow
- Controls sequential operation of pumps
- Automatically starts auxiliary pumps and engines
- Stops liquid cooled engines, machines and processing when coolant flow is interrupted
- Shuts down burner when air flow through heating coil fails
- Controls dampers according to flow

DESCRIPTION

The **Series V4 Flotect® Vane Operated Flow Switch** is rugged and reliable, ideal for automatically protecting equipment and pipeline systems against damage from reduction or loss of flow. Time tested in thousands of pipeline installations and processing plants around the world this Series is Weatherproof, designed to meet NEMA 4 and Explosion-proof (listing included in specifications). This series can be used in pipes 1-1/2″ and up.

SPECIFICATIONS

Service	Gases or liquids compatible with wetted materials.
Wetted Materials	Vane: 316 SS; Body: Brass or 316 SS standard; Magnet keeper: 430 SS standard, 316 SS optional; Options: Other materials also available, consult factory (e.g. PVC, hastelloy, nickel, monel, titanium).
Temperature Limit	-4 to 275°F (-20 to 135°C) standard, MT high temperature option 400°F (205°C) [MT option not UL, CSA, ATEX or IECEx] ATEX and IECEx options, ambient temperature -4 to 163°F (-20 to 73°C); Process temperature -4 to 163°F (-20 to 73°C).
Pressure Limit	Brass body 1000 psig (69 bar), 316 SS body 2000 psig (138 bar), optional 5000 psig (345 bar) available with 316 SS body and SPDT switch only.
Enclosure Rating	Weatherproof and Explosion-proof. **Listed with UL and CSA for Class I, Groups C and D; Class II, Groups E, F, and G. ATEX CE 2813 Ex II 2 G Ex db IIB T6 Gb -20°C≤Tamb≤73°C. -20°C≤Process Temp≤73°C. EU-Type Certificate No.: KEMA 03ATEX2383. ATEX Standards: EN 60079-0:2012+A11:2013; EN 60079-1:2014. IECEx Certified: For Ex db IIB T6 Gb -20°C≤Tamb≤73°C. -20°C≤Process Temp≤73°C. IECEx Certificate of Conformity: IECEx DEK 11.0071. IECEx Standards: IEC 60079-0:2011; IEC 60079-1:2014. Zone I. Also FM approved.
Switch Type	SPDT snap switch standard, DPDT snap switch optional.
Electrical Rating	UL, FM, ATEX and IECEx models 10 A @ 125/250 VAC (V~). CSA models: 5 A @ 125/250 VAC (V~); 5 A res., 3 A ind. @ 30 VDC (V ⎓). MV option: 1 A @125 VAC (V~); 1 A res., .5 A ind. @ 30 VDC (V ⎓). MT option: 5 A @ 125/250 VAC (V~). [MT and MV option not UL, CSA, FM, ATEX or IECEx].
Electrical Connections	UL and CSA models: 16 AWG, 6″ (152 mm) long. ATEX and IECEx unit: Terminal block.
Conduit Connection	3/4″ female NPT standard or M25 with -BSPT option.
Process Connection	1-1/2″ male NPT or 1-1/2″ male BSPT.
Mounting Orientation	Within 5° of vertical for proper operation. Units for horizontal installation (vertical pipe with up flow) available.
Set Point Adjustment	For universal vane: five vane combinations.
Weight	4 lb 8 oz (1.9 kg).
Agency Approvals	ATEX, CE, CSA, FM, IECEx, UL**.
**No housing option (-NH) has no approvals.	

DIMENSIONS

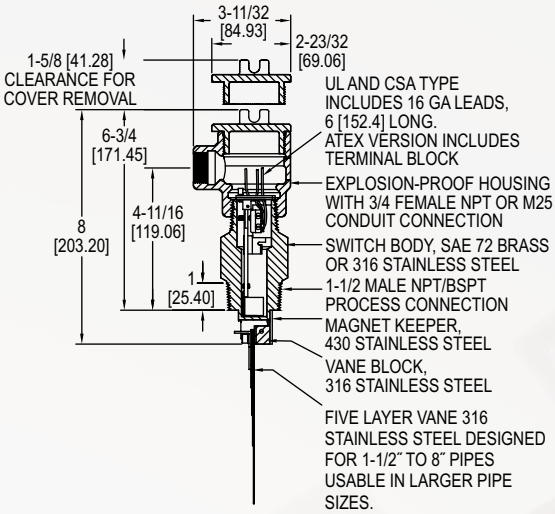

HOW TO ORDER

Use the **bold** characters from the chart below to construct a product code.

V4 **-2** **-U** **-NH** **-D**

SERIES
V4: Flotect® vane operated flow switch

BODY
-2: Short style brass body
-SS: 316 SS (with 430 SS magnet keeper)

VANE
-U: Universal
BLANK: Custom

HOUSING
BLANK: With housing
-NH: No housing (has no approvals)

OPTIONS
-D: DPDT contacts
-MV: Gold plated contacts, options for dry circuits*
-MT: High temperature, option rated 400°F (204°C)*
-TRI: Increasing flow time delay relay option with 2 SPDT contacts, adjustable from 0-1 to 0-31 minutes*
-TRD: Decreasing flow time delay relay option with 2 SPDT contacts, adjustable from 0-1 to 0-31 minutes*
-316: 316 SS magnet keeper, option to replace standard 430 SS
-V: Vertical up flow, option for upward flow in vertical pipe
-AT: ATEX compliant construction
-IEC: IECEx certified construction
-BSPT: Male BSPT process connection and M25 conduit connection

*See electrical rating in specification, no listings or approvals.

ORDER ONLINE TODAY!
dwyer-inst.com/Product/SeriesV4

©Copyright 2020 Dwyer Instruments, Inc.
Printed in U.S.A. 8/20

DS-V4 Rev. 3

Important Notice: Dwyer Instruments, Inc. reserves the right to make changes to or discontinue any product or service identified in this publication without notice. Dwyer advises its customers to obtain the latest version of the relevant information to verify, before placing any orders, that the information being relied upon is current.