Generating Superior Solutions for Energy and More.

KSTAR
Powering the Future

STS100D/STS250D NEW Automatic Switching Cabinet

On-grid / Off-grid / 100–250 kVA



202410-V3

Block Diagram:

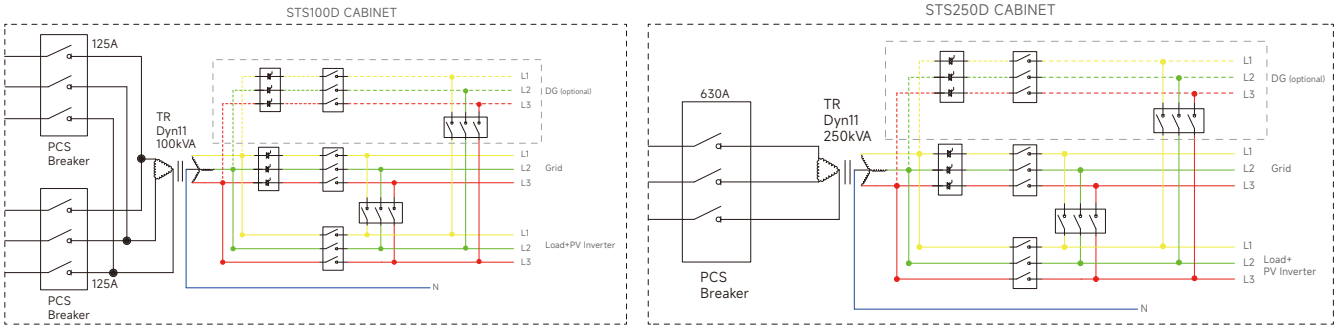

Parameter	STS100D	STS250D
Rated Voltage	400 V	400 V
Rated Current	144 A	360 A
Rated Frequency	50 / 60 Hz	50 / 60 Hz
Rated Power	100 kVA	250 kVA
Max. Grid Input Power	150 kVA	375 kVA
Switch Time Between On / Off-grid	⩽ 20ms	⩽ 20 ms
PCS Input	125 A*2	125 A*5
Max. Grid Input	250 A	630 A
DG Input (Optional)	250 A	630 A
Load Breaker	250 A	630 A
Grid / DG Bypass Breaker	250 A	630 A*2
Isolation Transformer	100 kVA	250 kVA
Lightning Protection	Type II	Type II
Protection Degree	IP54	IP54
Relative Humidity	0 ~ 100%	0 ~ 100%
Operating Temperature	-25°C ~+ 45°C	-25°C ~+ 45°C
Cooling Type	Air Cooling	Air Cooling
Dimensions (W x H x D)	900 x 2380 x 930 mm	1300 x 2380 x 930 mm
Weight	960 kg	1550 kg
Operating Altitude	⩽ 3000 m	⩽ 3000 m
Communication	RS-485 / 4G / Ethernet	RS-485 / 4G / Ethernet
Installation	Tower - type	Tower - type

* The capacity of the PV inverter for AC coupling can't be larger than the capacity of PCS.
** One STS100D can be connected to a maximum of two KAC50DP.
*** One STS250D can be connected to a maximum of five KAC50DP or two KAC125D.

© 2024 Shenzhen KSTAR New Energy Co.,Ltd. All rights reserved. Data subject to change without prior notice.