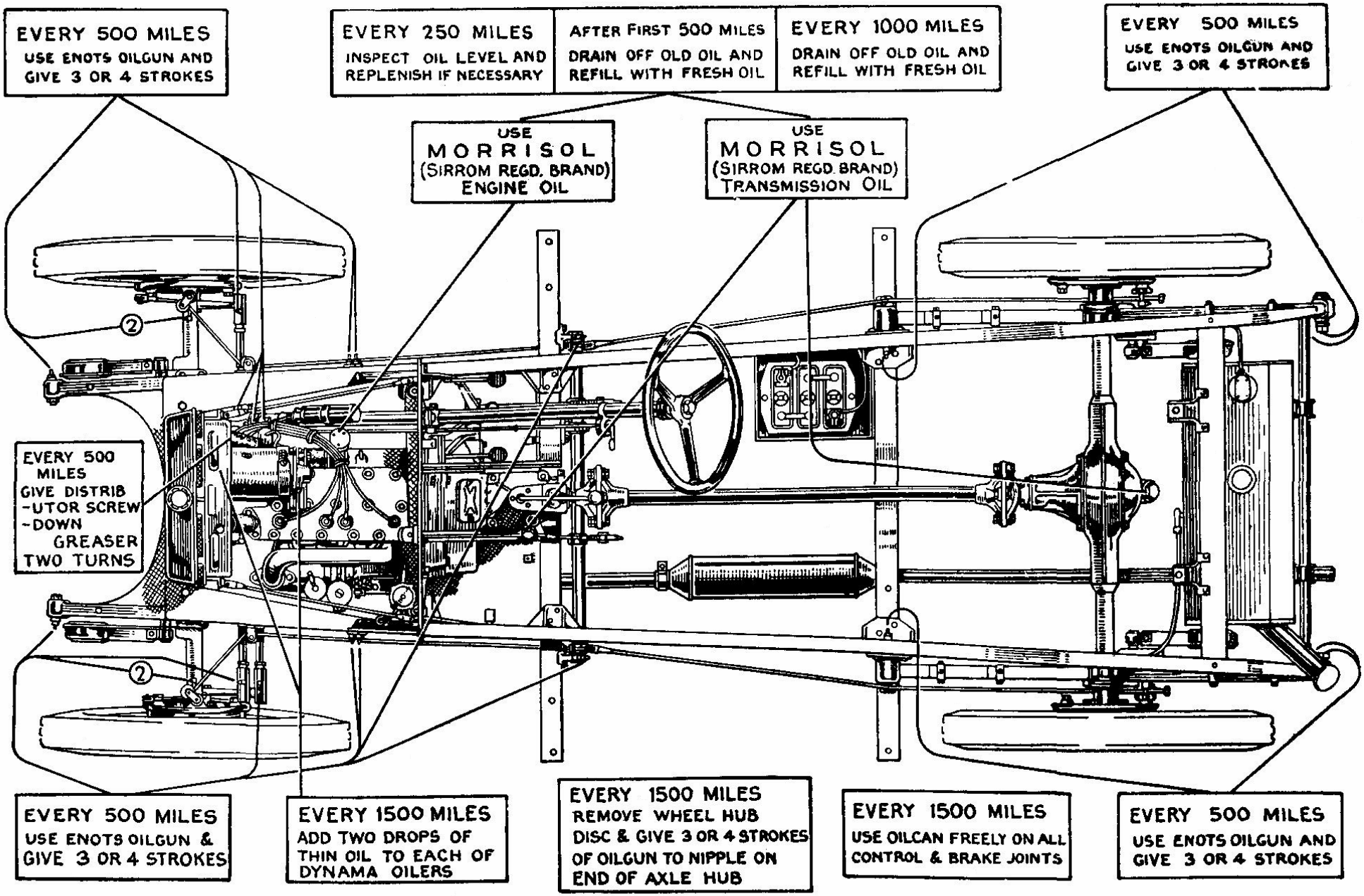

FIG. 11. MINOR CHASSIS LUBRICATION CHART