MetriCorr

TR-Monitor Reference Manual

All TR-Monitor products

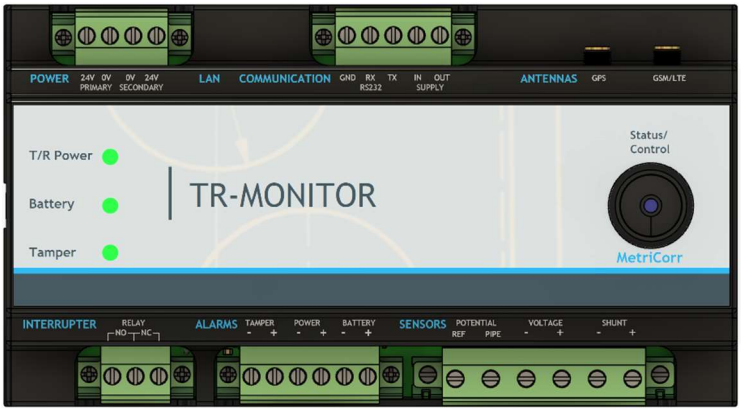



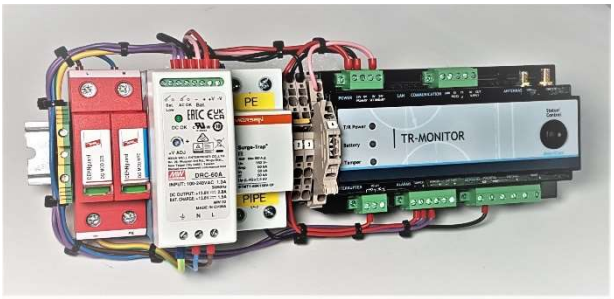

Document: 102618-06

Target format: A4

Release date: April 2024

Toerringvej 7 Roedovre 2610 Denmark Tel. +45 9244 8080 info@metricorr.com

Contents

1 Introduction 3
1.1 Terms & abbreviation 4
2 TRM - Specifications & Basic Functions 5
2.1 Overview of Basic Functions 5
2.2 Specifications (TRM) 6
2.3 Accessories 8
2.4 LED indicators & Alarm inputs 9
2.5 Data transmission & WEBservice 10
2.6 Shunt (Create Component in WEBservice) 10
2.7 MasterLink – Control Button & "Status LED" 11
3 Peripheral components 13
3.1 Power Pack for TR-Monitor with UPS/battery charger 13
3.1.1 Specifications – Power Pack for TR-Monitor 14
3.1.2 Schematic – TRM & Power pack (Internal connections) 15
3.1.3 Re-chargeable battery recommendations 15
3.2 Extra surge protection (External) 16
3.2.1 TRM Additional Input Surge Protection 17
4 How to build a TRM system 18
4.1 Installation – TRM module 18
4.1.1 Schematic example – TRM module 19
4.1.2 Installation Instructions – TRM module 20
4.2 Installation (Power Pack for TRM) 23
4.2.1 TRM & Power pack (External connections) 23
4.2.2 Installation Instructions (Power Pack for TRM) 24
4.3 Schematic example – Rectifier, TRM & Power pack 25
4.4 Schematic example – Extra surge prot. (Rectifier, TRM & Power pack) 26
5 Assembled Junction box systems 27
5.1 Features – All types of junction boxes (TRM products) 28
5.1.1 Antennas for Junction boxes 28
5.1.2 AC grid voltage measuring 29
5.2 TR-Monitor Junction Box (40x40x20cm) 30
5.2.1 External connections (TR-Monitor Junction Box) 31
5.2.2 Schematic example – T/R cabinet 32

5.2.3 Installation (TR-Monitor Junction Box) 33
5.2.4 Interrupter relay - NC or NO 34
5.2.5 Schematics – TR-Monitor Junction box 35
5.3 Interrupter & TR-Monitor Junction box (60x40x20cm) 37
5.3.1 Specifications (Interrupter & TR-Monitor Junction Box) 38
5.3.2 Installation (Interrupter & TRM Junction box) 39
5.3.3 Schematics (Interrupter & TRM Junction Box) 40

1 Introduction

This manual describes how to install all of MetriCorr's Transformer/Rectifier Monitoring (TRM) products.

The TRM and peripheral components can be installed in existing Transformer/Rectifier cabinets in various combinations.

MetriCorr also offers factory assembled & tested junction boxes with TRM and peripheral components for easy installation on site. This manual is divided into the following main sections:

- TRM – Specifications & Basic Functions
- Peripheral components
- How to build a TRM system
- Assembled Junction box TRM systems



All TRM products are based on MetriCorr's TR-Monitor module, referred to as "TRM", which is able to perform measurements on 3 analog inputs, receive alarms on 3 logic/digital inputs, control an external interrupter relay and communicate via LTE & GPS connections. Similar to MetriCorr's Slimline series of dataloggers, the TRM holds a "MasterLink" for data communication with WEBservice, which is MetriCorr's online remote monitoring system. (CP manage)
Go to www.metricorr.com for more information and operation instructions for WEBservice.

The TRM is designed to monitor various types of Transformer/Rectifiers for cathodic protection of pipelines and other metal structures.

1. Pipe to reference electrode potential
2. Transformer/Rectifier output current.
3. Transformer/Rectifier output voltage.
4. Instant Off Interruption, that is time synchronized with other MetriCorr TRM modules & dataloggers.
5. Off-potentials measurements

This "TR-Monitor Installation Manual" can also be downloaded at www.metricorr.com/downloads.

1.1 Terms & abbreviation

TRM	Transformer Rectifier Monitor. (Refers to MetriCorr's DIN-rail mounted TRM module.)
T/R	Transformer/Rectifier feeding the pipe/structure with DC-current.
Rectifier	Power supply feeding the pipe/structure with DC-current.
Pipe	Refers to buried metallic pipeline or other metal structure.
Interrupter	Switch/breaker/relay connected between rectifier and pipe to interrupt the current to the pipe.
Off-potential	Pipe-potential immediately after the cathodic protection current has been cut off. (Interrupted)
WEBservice	MetriCorr's online cathodic protection management software, which is also known as "CP*Manage"
MasterLink	Integral part of the TRM, which handles data communication, data logging, etc.
SPD	Surge Protection Device
RMU	Remote Monitoring Unit

The TRM terminals are referred to by "TRM" followed by the name of the given terminal in parentheses.

In example: "TRM (Power, Primary, 24V)".

2 TRM - Specifications & Basic Functions

2.1 Overview of Basic Functions

POWER

PRIMARY:
Normal power source
(Power supply from mains)

SECONDARY:
Backup power source (Battery)

LAN

RJ45 socket for ether-net

COMMUNICATION

RS232: GND, RX, TX
Serial communication

IN, OUT, SUPPLY:
Software controlled Relay for powering peripheral units.

ANTENNAS

GPS:
Position and Time sync.

GSM/LTE

Mobile network

Status/Control

Control button & LED indicator

See section 2.7 for Blink patterns



INTERRUPTER (Output)

RELAY:
NO: Normally Open
COM: Mid terminal
NC: Normally Closed

Controls external switch/interrupter for the rectifier.

ALARMS (Digital inputs)

TAMPER: (Tamper LED)
For door switch, etc.
Normal: Switch open, LED: Green
Alarm: Switch closed, LED: Red

POWER: (T/R Power LED)
For T/R Power Failure
Power OK, LED: Green

BATTERY:
For Battery fail signal.
Battery NOT OK, LED: Red

SENSORS (Analog inputs)

POTENTIAL:
Voltage measurement between pipe and reference electrode

VOLTAGE:
Voltage measurement for rectifier output.

SHUNT:
Voltage input in the mV range.
Connect to an external shunt resistor to measure current.

2.2 Specifications (TRM)

POWER (Input)

Voltage range: (Primary & Secondary) [10V -> 28Vdc]

Supply voltage	Standby current, max.	Average current (Estimated)	Maximum current
12V dc supply	16 mA	22 mA	100 mA, (1.2W)
24 Vdc supply	12 mA	16 mA	45 mA (1.08W)

LAN

RJ45 socket for LAN/ethernet connection

COMMUNICATION

This 5 pin connector enables power and communication to an external RS232 device.

RS232 interface	GND, RX, TX
Supply In & Out	Software controlled relay for powering peripheral units. Timing can be set in WEBservice.

ANTENNAS

GSM/LTE antenna	2G / 3G / 4G / 5G
GPS antenna	GPS / GNSS

Status/Control

See section 2.7 MasterLink – Control Button & “Status LED”

INTERRUPTER

This relay output controls interruption of cathodic protection current for off-potential measurements. The relay combines a bi-directional Solid State Relay and a mechanical relay for fast response time and true “Normally closed” operation” in case of power down.

Relay specifications:

Type:	Bi-directional Solid State Relay + mechanical failsafe relay
Maximum peak voltage:	± 30 V
Maximum current:	500 mA

Note! The connection from rectifier to pipe will be removed when the 3way terminal block for the relay is removed from the TRM.

For higher currents (> 500 mA) an external relay can be controlled using this output.

See section 4.1.2 Installation Instructions – TRM module

ALARMS (Digital inputs)

These 3 inputs are logical HI or LO and galvanically isolated from each other and all other inputs and outputs.

Voltage range:	[0Vto 30V]
HI state minimum voltage:	2.5V
LO state maximum voltage	0.7V

TAMPER: Typically used for door switch
POWER: Typically connected to a “Power monitor” output from the UPS or T/R if available.
BATTERY: Typically connected to an UPS/battery charger/controller that indicates low battery voltage.

SENSORS (Analog inputs)

POTENTIAL (REF input to PIPE input) and **VOLTAGE** ("+" input to "-" input)			
Electrical charac-teristics	Voltage range:	± 100 V_{DC} 100 V_{AC}	
	Input resistance	~ 10 MΩ	
	AC to DC rejection	- 80 dB	
	DC voltage resolution:	0.1 mV	
	DC voltage accuracy:	± 1mV ± 0.3%	
	AC Voltage Resolution	0.1 mV	
	AC Voltage Accuracy	± 1mV ± 1%	
Surge Protection	EN/ISO 61000-4-5, installation class 4.		
	Nominal Discharge Current 8/20 µs	5 kA	
	Lightning Impulse Current 10/350 µs	1 kA	
Isolation voltage	2.5 kV for 1 second		Isolation voltage to all other inputs

SHUNT ("+" input to "-" input) *Millivolt input for current measurement using an external shunt resistor*			
Shunt selection (Examples)	Recommended DC Voltage range for shunt selection, max	± 200mVdc	
	Rectifier output 100A	125A / 60 mV	Shunt resistance 0.48 mΩ (P_{max} = 6.0W)
	Rectifier output 20A	25A / 150 mV	Shunt resistance 6.0 mΩ (P_{max} = 3.0W)
	Rectifier output 3A	4A / 150 mV	Shunt resistance 37.5 mΩ (P_{max} = 0.45W)
	WEBservice calculates the corresponding current from a user-determined shunt resistance value.		
Electrical charac-teristics	Absolute max. continuous voltage	± 100 V_{DC} 100 V_{AC}	
	Voltage range (peak, incl. AC)	± 1 V	Before clipping
	Input impedance	33 kΩ	(Resistive)
	AC to DC rejection	-80 dB	
	DC voltage resolution	0.2 µV	(0.2mA @ 1mΩ, 2µA @ 100mΩ)
	DC voltage accuracy	±1 µV ±0.1% rdg	(1mA ±0.1% rdg @ 1 mΩ, 10µA @ 100mΩ)
	AC Voltage Resolution	0.2 µV	(0.2mA @ 1mΩ, 2µA @ 100mΩ)
	AC Voltage Accuracy	±5 µV ±0.1% rdg	
Surge Protection	EN/ISO 61000-4-5, installation class 4.		
	Nominal Discharge Current 8/20 µs	10 kA	
	Lightning Impulse Current 10/350 µs	2.5 kA	
Isolation voltage	2.5 kV for 1 second	Isolation voltage to all other inputs	

General	
Casing	IP20, DIN-rail mount
Operating temperature range	-40 °C to +85 °C
Dimensions	L: 156mm, W: 60mm H: 86mm

MasterLink	
Storage capacity	+200,000 readings
Logging intervals	10 min → ∞, recommended 1 hour
Communication	LTE Cat. M – 4G/5G with 2G fall back Ethernet RS232 GPS/GNSS Position and Time Synchronization

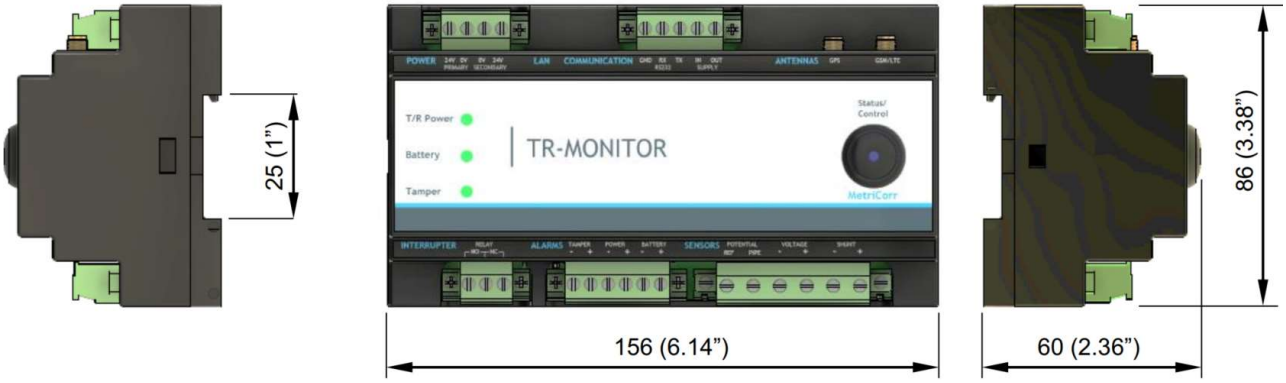

2.3 Accessories

Connectors with screw terminals: 3 pin, 4 pin, 5 pin, 6 pin and 6 pin (wide)
TR-Monitor installation manual, A4 booklet

2.4 LED indicators & Alarm inputs

The three LED indicators on the left side of the front panel indicates the status of the digital TRM Alarm inputs, which can be either logically low or high.

- **"T/R Power"** is dedicated to show the status of the T/R to be monitored. Many T/R's are equipped with a "Power monitor" signal output that can be connected to the TRM (Power) inputs.

- **"Battery"** is dedicated to indicate if a connected battery is discharged or defect. Battery powered UPS supplies are often equipped with a status signal output that can be connected to the TRM(Battery) input.

- **"Tamper"** is dedicated to i.e. a door-switch to indicate intrusion/access to the TRM-installation.

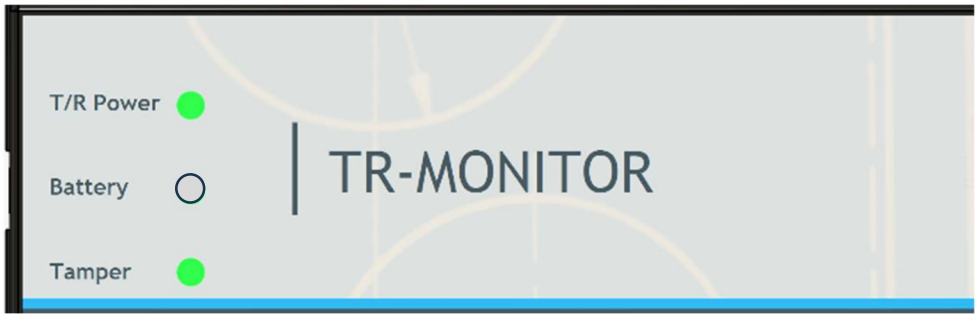

The three LEDs will light up red or green according to the following table:

Logical Input Level	Low	Unconnected	High
LED Indication			
T/R Power	Green	OFF	OFF
Battery	OFF	OFF	Red
Tamper	Green	Green	Red

If all TRM (ALARM) input terminals are left unconnected, the "T/R Power" and "Battery" LEDs will be turned off and the "Tamper" LED will be green.

2.5 Data transmission & WEBservice

Measurement data from the sensor inputs can be transmitted by the MasterLink via mobile network or ethernet connection using MetriCorr's WEBservice. https://data-metricorr.com.

MasterLink data communication

1. **Mobile network** wireless LTE/GSM to WEBservice
2. **Ethernet** cable connection to external router/modem

New customers must provide company name and email address to MetriCorr to receive account information (username and password) to login to WEBservice at https://data-metricorr.com.

Please contact MetriCorr at support@metricorr.com

It is possible to acquire several logins (username and password) to the same WEBservice account.

To link a new MetriCorr device to an existing account, please send an email to support@metricorr.com with the following information:

- **Account Name** (existing or new) you wish the unit(s) to be assigned to.
- **User email address** (for new users to log in to existing or new accounts**)**
- **MasterLink Serial Number(s)** you wish to link to the account

2.6 Shunt (Create Component in WEBservice)

To enable current monitoring of the T/R output, a shunt must be inserted in the current path and connected to the "SHUNT" measurement input on the TRM module as illustrated in section 4. In WEBservice, a "T/R - Component" must be created to enable TRM measurements.

The shunt resistance in milliohms must be typed into WEBservice to enable display of current graphs.

This example is based on the shunt found in MetriCorr's "Interrupter & TR-Monitor Junction box", see section 5.3, that is rated at 100A at 60mV. The resistance is given by the voltage rating divided by the current rating:

Example: R_{shunt} = 60mV / 100A = 0.6mΩ

2.7 MasterLink – Control Button & “Status LED”

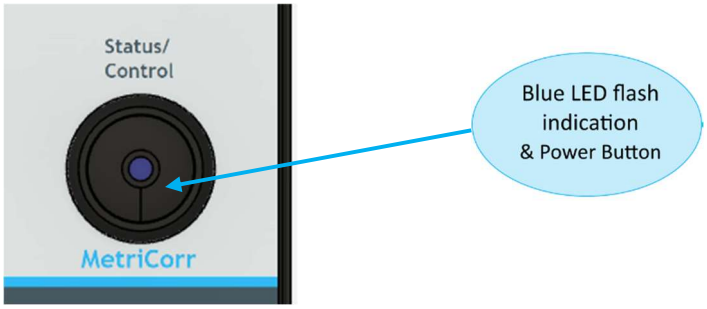

TR-Monitor

The Blue Status LED indicates the state of the TRM.

Pressing the control button shortly (< 0.5s) may result in
any of the two LED flash patterns below:

25 short blinks indicates that the unit is turned off. This state is rarely used for other applications than MetriCorr’s VL100/MasterLink with built-in lithium battery.

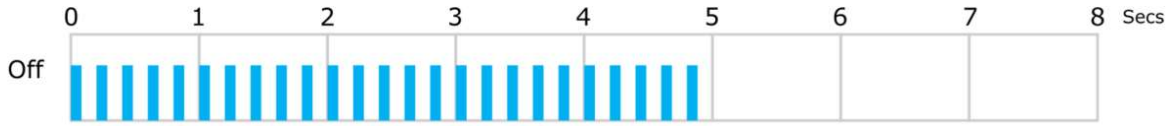

11 blinks indicates that the unit is in “Sleep mode”, which minimizes the current consumption, ideal for battery operated installations.



Pressing the control button for at least 5 sec will turn the unit on or off.

Pressing the control button for at least 1 sec, but less than 5 sec will put the MasterLink in "Searching" mode, indicating that WEBservice or COM port communication is attempted.

	WEBservice	
Searching	The TRM is searcing for a network.	
	1 short (0.5 ms) flash repeated every second. 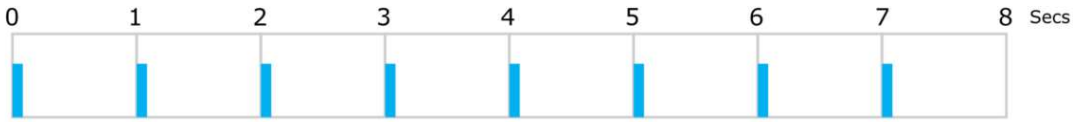	
Trans-mitting	The TRM is transmitting data to WEBservice	
	3 short (0.5 ms) consecutive flashes repeated every second. 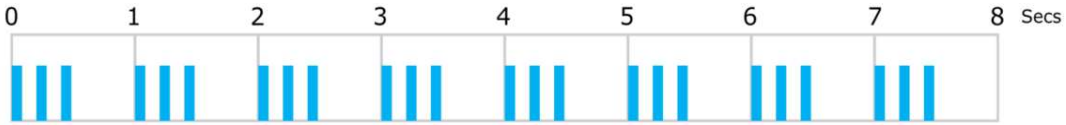	
Sleep mode	After data transmission has been performed, the unit will go into "Sleep mode", indicated by a short blink every 8 second. 	
Measuring (Dataloggin g)	When the unit is performing measurements, the LED will blink once a second. 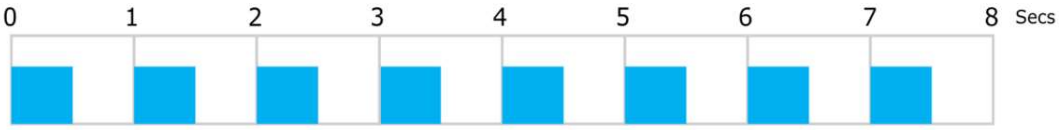	

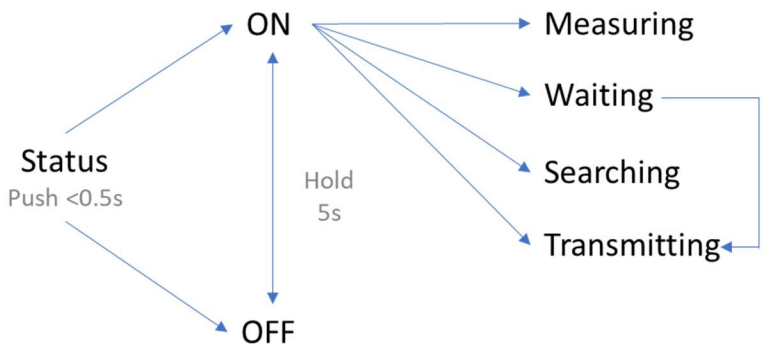

3 Peripheral components

3.1 Power Pack for TR-Monitor with UPS/battery charger

MetriCorr offers a compact DIN-rail based power supply solution for the TR-Monitor including an uninterruptable power supply with optional battery backup time up to 280 hours and surge protection between grid supply and Pipe connection. Recommended batteries are described with wide temperature ranges from -40°C to 65°C.

Combined with the “TRM Basic Pack”, the “Power Pack for TR-Monitor” can be delivered fully wired and tested as shown on the picture below, or as separated customer specified components.

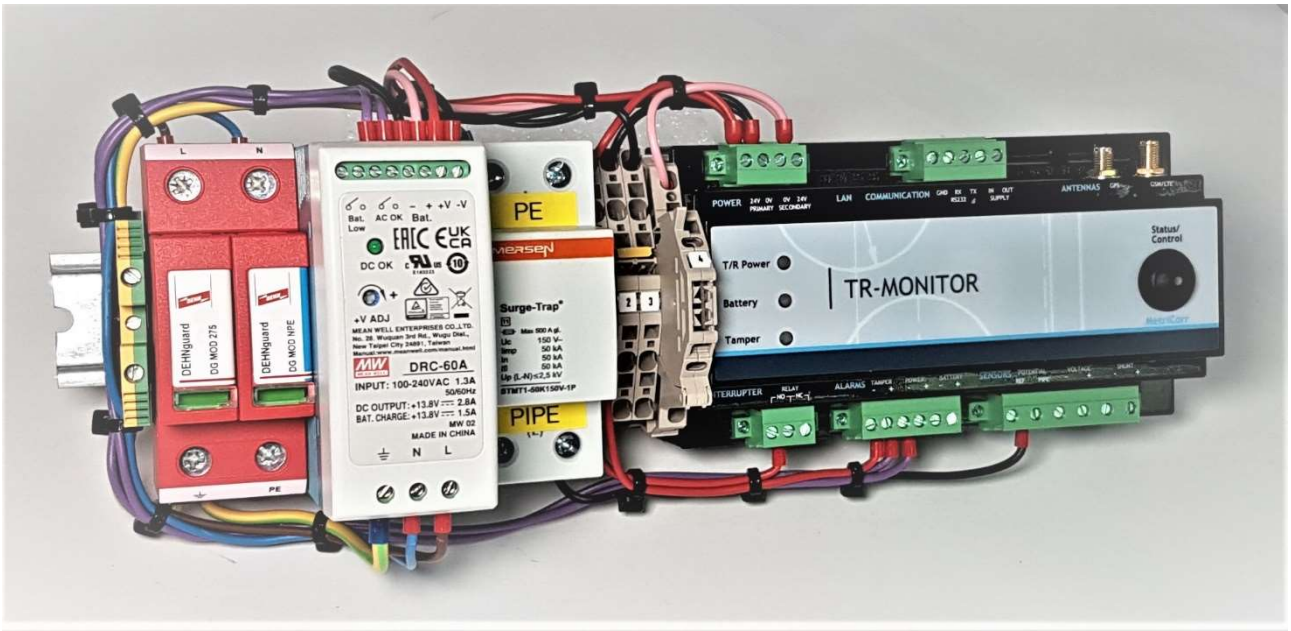

Features

- Universal AC supply (90 V to 264V)
- Power down detection (AC supply not ok)
  Indicated by the “T/R Power LED” and in WEBservice
- Battery voltage is monitored by WEBservice
- Tamper (door switch) detection
  Indicated by the “Tamper LED” and in WEBservice
- 12V re-chargeable “Lead Acid” or “Lead Crystal” battery can be used

3.1.1 Specifications – Power Pack for TR-Monitor

General

Ingres protection	IP20
Temperature range:	-30°C to +70°C
DIN-rail	Standard TS-35/7.5 DIN-rail cut to length: 370mm
Total dimensions of components	W:320mm, H:120mm, D:103mm (including wiring)

UPS/Battery charger

Manufacturer - Part number	**MeanWell – DRC-60A**
Input Voltage range:	90 VAC to 264 VAC
Nominal battery voltage:	12 VDC (battery not included)
Battery charge current, max.	1.7 A
Indicator outputs	"Low battery" and "AC OK", see note 1 and 2.
Adjustable voltage level to match optimal cell charge voltage for external battery:	
Output voltage range:	11.7 V to 15.3 VDC, see section 0.
Dimensions:	W:40mm, H:90mm, D:100mm

[1] The battery low indicator output is not used, because the TRM monitors the battery voltage at all time using the TRM's secondary input that is also connected directly to the battery.

[2] When the AC supply connected to "L" and "N" on the UPS is down, the UPS activates the "TRM alarm power" input and the "T/R Power" LED indicator on the TRM will turn off. Normally, when AC supply is available, this LED will be green.

Surge protection - Mains supply (Limiting surges from the mains supply (grid))

Manufacturer - Part number	**DEHN – DG M TN 2P 275**
Replaceble catridges:	DG MOD 275 DG MOD NPE
Surge discharge current (8/20us)	20 kA
Residual voltage, max.	1.5 kV
Dimensions:	W:36mm, H:90mm, D:73mm

Spark gap – Pipe to PE (Limiting surges between Pipe and "Mains PE connector")

Manufacturer - Part number	**Mersen – STMT1-50K150V-1P**
Surge discharge current (8/20us)	50 kA
Lightning Impulse Current (10/350us)	50 kA
Residual voltage, max.	2.0 kV
Dimensions:	W:36mm, H:90mm, D:73mm

DIN-terminals

2 x PE-screw terminal
3 x 4-way terminal
1 x fuse terminal for standard 5 x 20mm fuse cartridges.
1 x fuse, T3.15A

When the battery voltage drops below 10.1V, the UPS/charger will shut down, but the TRM will function since it is connected directly to the battery via its secondary input.

The "Battery" LED will always be off, since the "Battery alarm" input on the TRM is not used.

3.1.2 Schematic – TRM & Power pack (Internal connections)

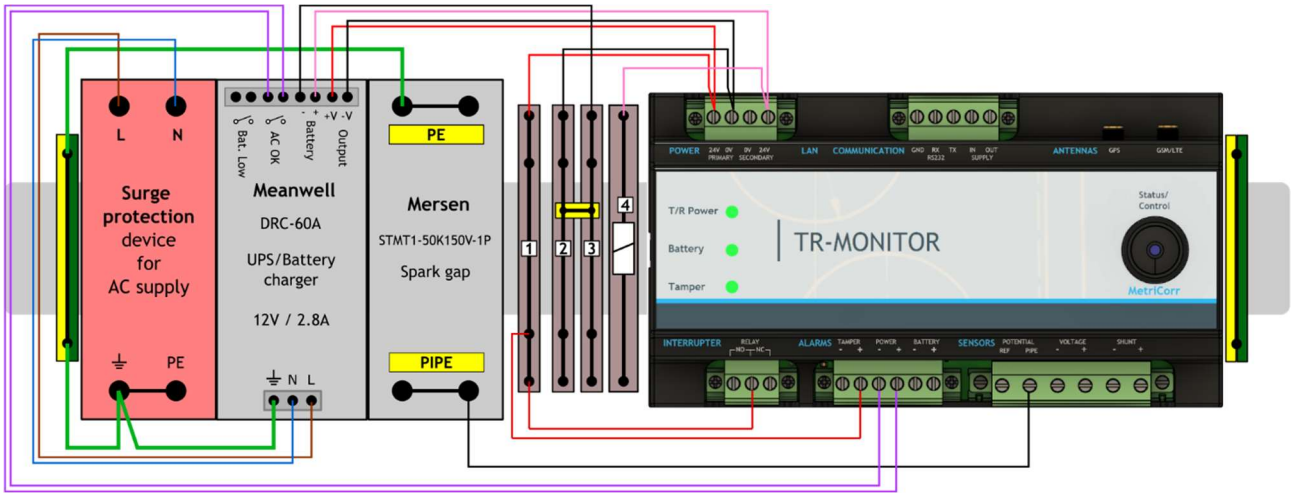

3.1.3 Re-chargeable battery recommendations

MetriCorr recommends Lead crystal batteries due to their wide temperature range and life expentancy. As a standard option we can supply a **12V/7.2Ah Lead Crystal battery** (Article number: 102984) as backup battery, which is also used in our Junction box products: “TRM junction box”, “Interrupter & TRM” and “Rectifer & TRM”.

MetriCorr Articel number	Type	Life expectancy at 25°C	Nominal voltage / Capacity	Optimal charge voltage	Dimensions LxWxH (Weight)	Tempera-ture range	Backup time
102984 **Standard Option**	**Lead Crystal battery**	**8-11 years**	**12V / 7.2Ah**	**13.38 VDC (@65°C)**	**151x65x102mm 5.9”x2.6”x4.0” (2.2kg / 4.6 lbs)**	**-40°C to +65°C**	**167 hours**
100775	Lead Crystal battery	8-11 years	12V / 12Ah	13.38 VDC (@65°C)	151x99x102mm 5.9”x3.9”x4.1” (4.1kg / 7.7 lbs)	-40°C to +65°C	280 hours
101457	Lead Acid	3-5 years	12V / 2Ah	13.20 VDC (@50°C)	150x20x89mm 5.9”x0.79”x3.5” (0.7kg / 1.54 lbs)	-20°C to +50°C	46 hours

3.2 Extra surge protection (External)

MetriCorr's surge protection design against high voltage surges is built around Surge Protection Devices (SPDs) that limits surge voltages to a certain level (i.e. 2 kV) by conducting the surge current, which eliminates the need for high isolation voltage of the equipment. Here, it is the current handling capability of the SPDs that indicates the level of surge protection along with the duration of the surge. The "Nominal Discharge Current, 8/20μs" is relevant for incoming surges from the mains AC supply, where the longer pulse current "Lightning Impulse Current, 10/350μs" is relevant for applications that are directly exposed to lightning induced currents such as buried pipelines.

The internal surge protection of MetriCorr's TR-Monitor is designed along with coordinated external SPDs to provide extremely rugged surge protection of 50 kA (10/350us) at a reasonable cost. MetriCorr provides a "TRM Additional Input Surge Protection"" of three spark gaps and two surge coils.

Mains AC supply (grid) connected installation:

For mains connected installations, surge protection between "Pipe" and "Grid", as found in the "Power pack for TRM", is needed to prevent high surge voltages to damage the TRM and power supply.

3.2.1 TRM Additional Input Surge Protection

This surge protection kit is designed to be installed in an existing T/R cabinet as an addition to a TRM module if very high surge protection levels of the TRM analog inputs are needed. The “TRM Additional Input Surge Protection” kit holds three spark gaps that must be connected between the following connection points:

1. Pipe “Drive” to Anode
2. Pipe “Drive” to PE (earth)
3. Pipe “Measurement” to Reference electrode

along with two surge coils (aircoils) as shown in the schematic example, section 4.4.

Note! If the SHUNT input of the TRM module is connected to another metal structure, which is electrically isolated from the Pipe/structure connected to the “POTENTIAL” and “VOLTAGE” inputs of the TRM module, the surge protection shown in the schematic example, section 4.4 is not adequate for high levels of surge protection!

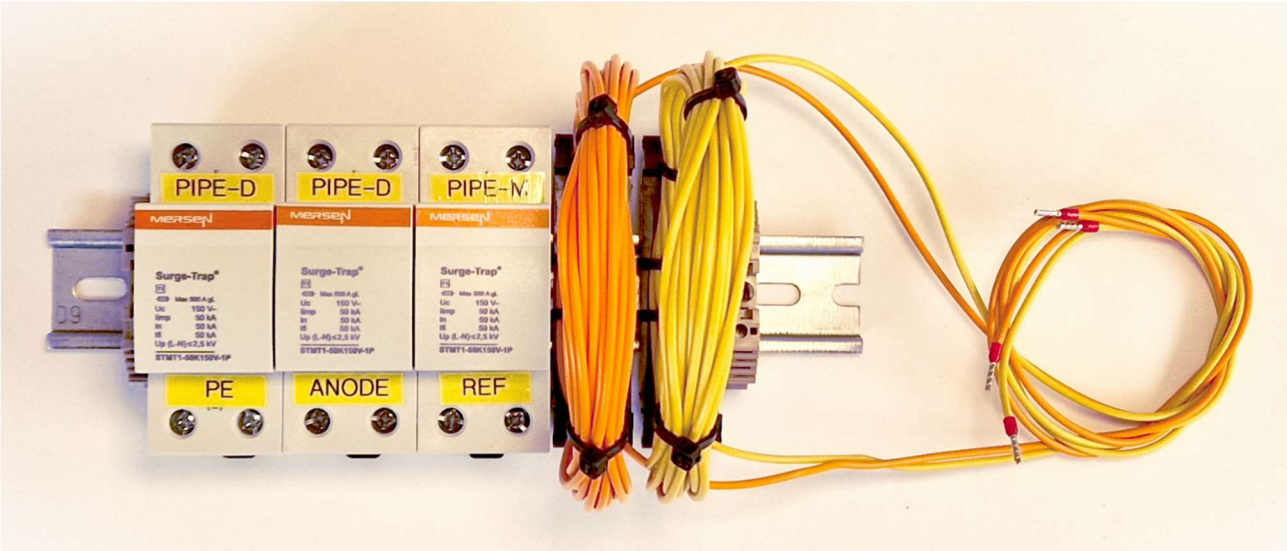

Specifications:

Spark gaps

Manufacturer - Part number	**Mersen – STMT1-50K150V-1P**
Surge discharge current (8/20µs)	50 kA
Lightning Impulse Current (10/350µs)	50 kA
Dimensions:	W:36mm, H:90mm, D:73mm

Surge coils

(Aircoils, limiting surge current to the TRM inputs)

Manufacturer - Part number	**MetriCorr**
Wire gauge	AWG 18 (1mm2)
Dimensions	Ø:110mm, W: 10mm

4 How to build a TRM system

This section describes how MetriCorr's TRM module with peripheral components can be installed as a complete T/R monitor system

4.1 Installation - TRM module

MetriCorr's TRM is designed for easy installation in existing T/R cabinets for cathodic protection. This section describes how the TRM is installed in a typical installation of a T/R for cathodic protection of a pipeline. See the schematic in section 4.1.1 Schematic example – TRM module

For this example, the existing installation consists of the following components:

- Rectifier (T/R)
- Relay / Interrupter (of rectifier current)
- Anode bed
- Reference electrode
- Door Switch (Normally closed)

TRM & peripheral components to be installed:

- TRM (MetriCorr)
- Power supply (12 Vdc or 24 Vdc, minimum 5W)
- Antennas (GSM/LTE and GPS)
- Battery (optional, for backup power in case of power outages)

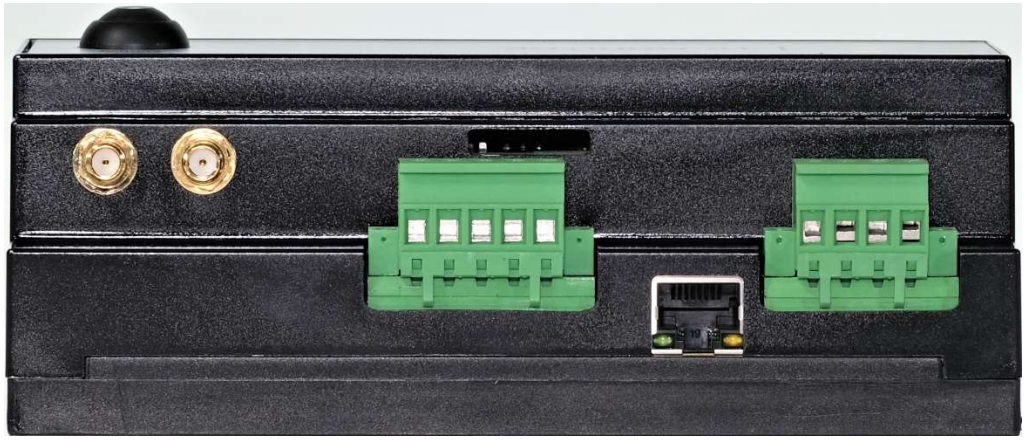

Top view, MetriCorr TRM

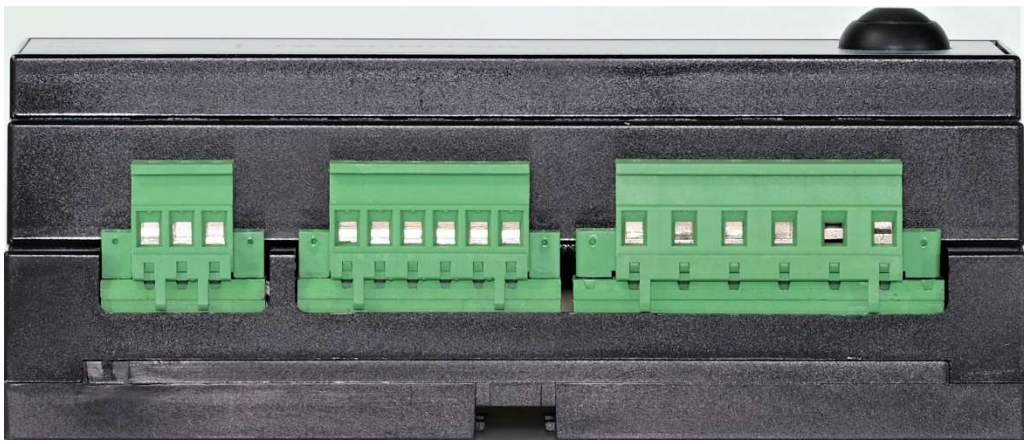

Bottom view, MetriCorr TRM

4.1.1 Schematic example – TRM module

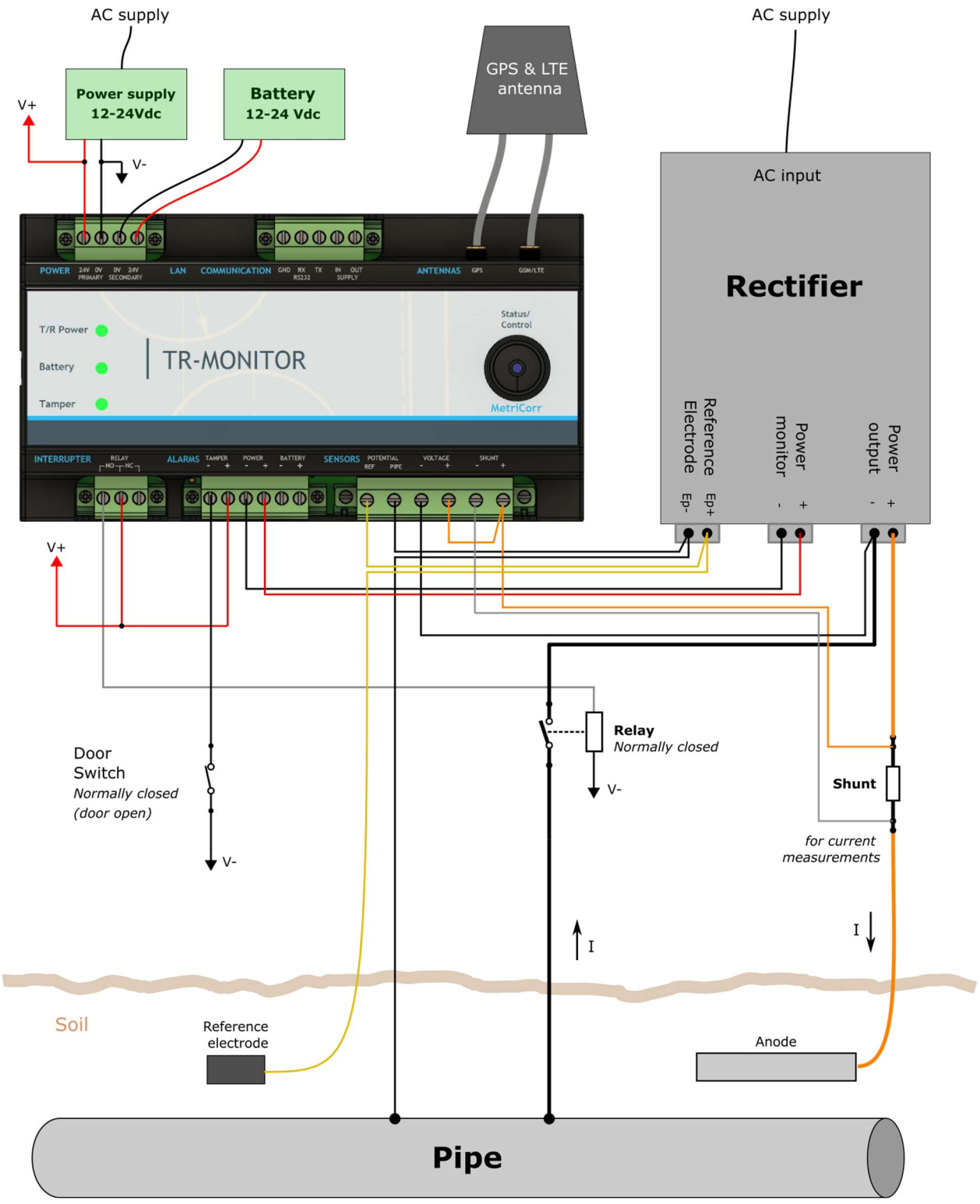

Note! This example shows how an external relay that is true “Normally Closed” can be connected to the TRM’s “Normally Open” output. If the external relay is a “Normally Open” type such as a solid state relay, then the internal “Normally Closed” relay output can be used to control the external relay.

4.1.2 Installation Instructions – TRM module

1. Select the shunt to make sure that the maximum voltage across the shunt does not exceed ± 200 mVdc under normal full range operation. (At maximum rectifier output current).

2. Make sure that the control voltage of the installed “Relay / interrupter” match the power supply level, i.e. 24 Vdc.

SENSORS (Analog inputs)

1. Connect the reference electrode to the TRM (POTENTIAL, Ref) input and the dedicated input terminal on the rectifier if available.

2. If **two pipe connections** exist; one for measurement and one for the rectifier drive current as shown on the schematic, section 4.1.1. (This will minimize the error from the voltage drop across the pipe cable for better measurement and rectifier accuracy).
   A. Connect “Measurement” pipe wire to TRM (POTENTIAL, PIPE) and to the rectifier measurement input if available.
   B. Connect “Drive” pipe wire to the negative rectifier output (via an interrupter relay if available)

   If only **one pipe connection** exists:
   Connect pipe wire to the TRM (POTENTIAL, PIPE) input and the negative rectifier output.

3. Connect the rectifier outputs to the TRM (VOLTAGE) inputs.

4. If a shunt is installed in the rectifier current path, connect the shunt to the TRM (SHUNT) inputs.
   Note! Pay attention to the rectifier current direction.

INTERRUPTER (Relay)

1. **Internal relay:** Use the terminals TRM(Relay, COM and NC) to insert the built in relay between T/R and PIPE (Max 500mA).
2. **External relay:** The TRM (Relay, COM) terminal is typically connected to V+ to enable drive current to an external relay through the terminals “NO” (Normally Open) or “NC” (Normally Closed). See the example in section 4.1.1.

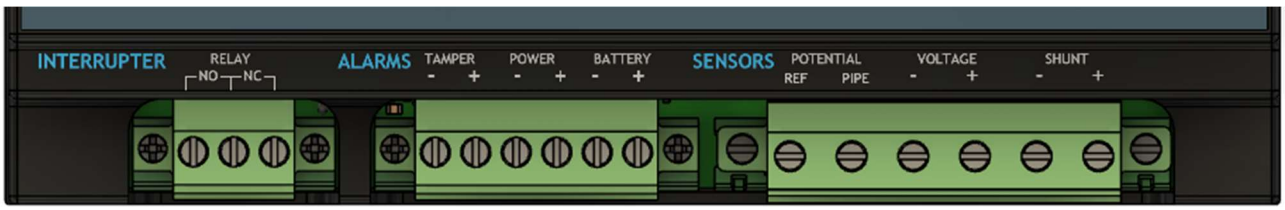

The TRM keeps the relay output in normal position when the TRM supply is down.

Make sure that an externally connected relay/interrupter is connected to either the NO or the NC terminal of the TRM, so that the T/R is connected to the pipe during normal operation.

Note: If the TRM is removed from installation, then it is necessary to connect the COM and NC wires in the RELAY cable connector to preserve a pipe connection.

ALARMS (Digital inputs)

1. Connect a door switch to TRM (TAMPER, -) and V-.
   Connect TRM (TAMPER, +) to V+.
   If there's no door switch, leave both TAMPER inputs unconnected.

2. Connect TRM (POWER, - and +) to the rectifier power monitor outputs if available. Otherwise leave both TRM(POWER) inputs unconnected.

3. UPS/Battery power supplies are typically equipped with a status output signal that can be connected to the TRM (BATTERY) inputs. (Not shown on the schematic, section 4.1.1).
   However, this example uses the secondary power input for battery backup supply. Here, the TRM (BATTERY) inputs can be left unconnected.

POWER (Inputs)

1. Connect the DC power supply (12 Vdc to 24 Vdc) to the TRM (POWER, PRIMARY) inputs.
   "24V" is referred to as "V+". "0V" is referred to as "V-".
   The AC/DC power supply must be connected to the same AC supply as the rectifier to enable the TRM to monitor the AC supply to the rectifier.

2. Connect backup battery (or other backup power supply) to the TRM (POWER, SECONDARY) inputs.
   Note! The TR-M module will internally connect to either the primary or secondary input due to the following conditions:
   - Primary input connected if the primary power supply is available.
   - Secondary input connected if the primary power supply is NOT available.

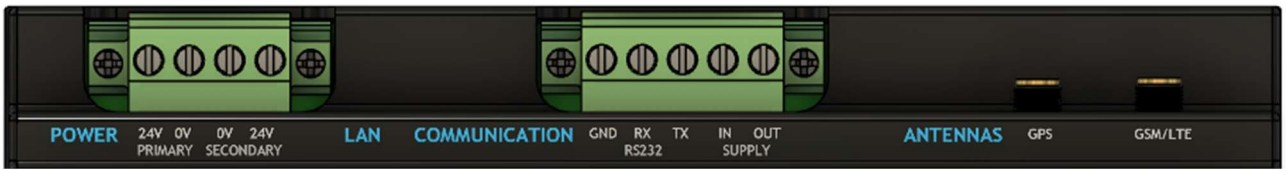

LAN & COMMUNICATION

1. Typically, the TRM communicates with WEBservice via the GSM/LTE antenna.
2. The TRM has a LAN connector, and it can optionally be delivered with a setup for a LAN network. Contact MetriCorr for network requirements
3. RS232 communication is not in use

ANTENNAS

1. A GSM/LTE antenna that meets the requirement of the available network in your area must be connected to the TRM (ANTENNAS, GSM/LTE) terminal to establish wireless data connection for the MasterLink.

2. Reception of GPS coordinates and time stamps for synchronization of multiple TR-Monitors for off-potential measurements can be realized in two ways:
    a. A dedicated GPS/GNSS antenna can be connected to the TRM (ANTENNAS, GPS) terminal. This antenna must have unblocked access to the sky to receive data from the required satellites.
    b. If no external antenna is connected to the TRM (ANTENNAS, GPS) terminal, the internal GPS/GNSS antenna on the TRM circuit board can be used.

    Changing between Internal and External GPS/GNSS antenna can be done in the Setup -> HW installation menu in WEBservice.

4.2 Installation (Power Pack for TRM)

4.2.1 TRM & Power pack (External connections)

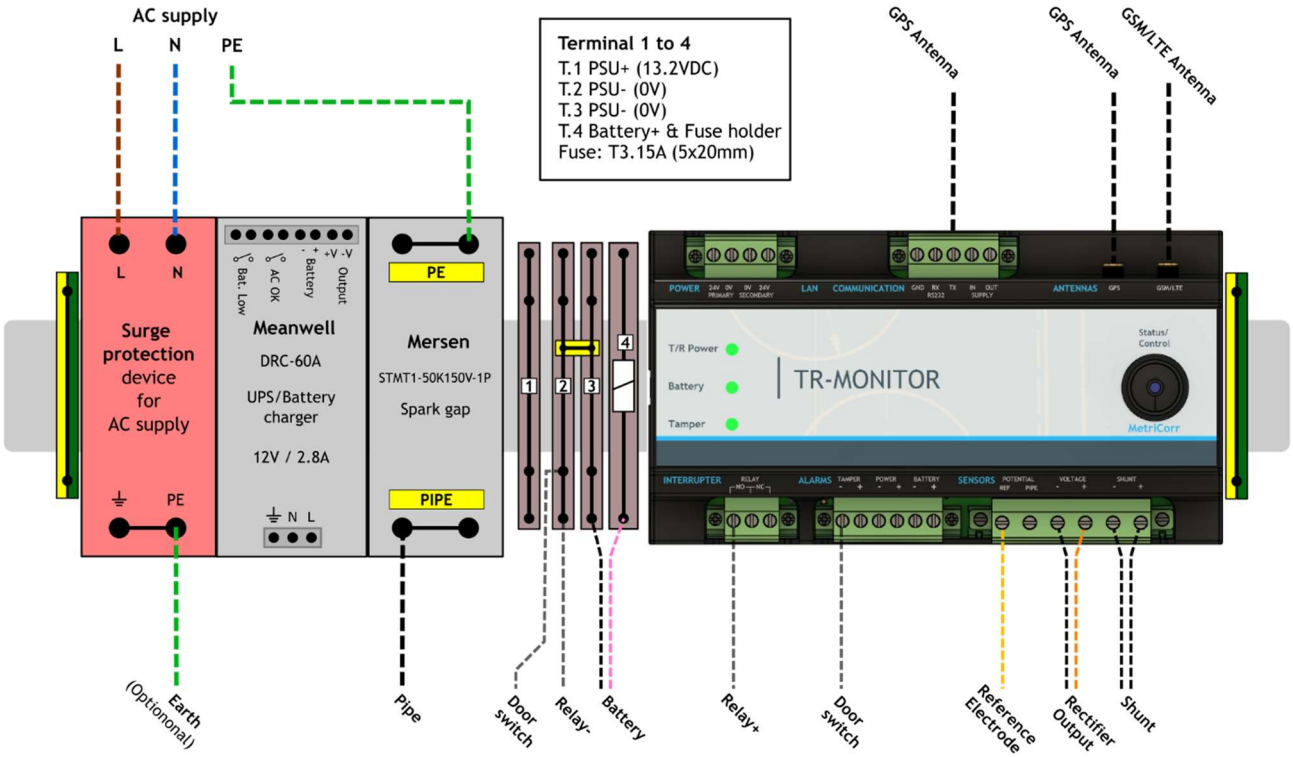

All external connections from the TRM & Power Pack are shown on the schematic above. A schematic example of a full installation is shown in section 4.3 Schematic example – Rectifier, TRM & Power pack

Note! The recommended cross sectional area of the AC supply wires “L” and “N” is 18 AWG (~ 1mm^2), which is the same wire size as the internal blue and brown wires connected to the same screw terminals. This to make sure that both wires in the same terminal is tightened with the same force.

4.2.2 Installation Instructions (Power Pack for TRM)

The Power Pack for TRM comes on a 34cm DIN-rail. To access the DIN-rail screw holes for mounting, do the following:

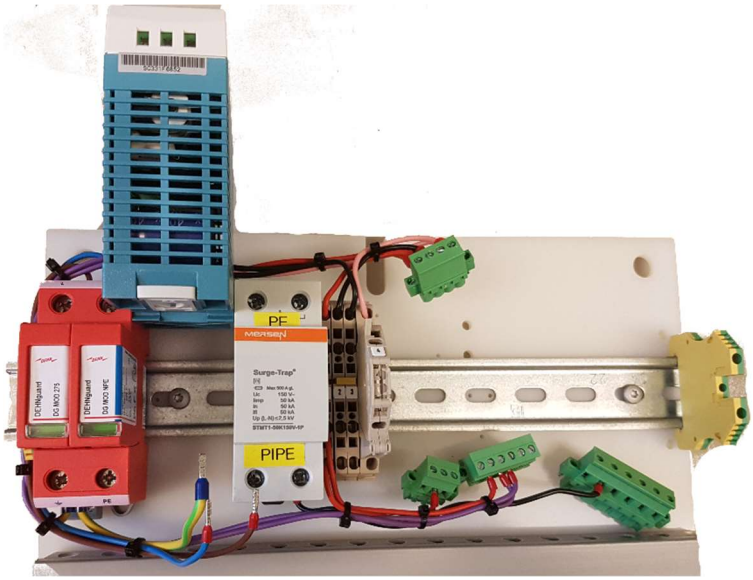

1. Remove the 3 wires to the UPS (Tallest unit on the DIN-rail). Use a screw driver to pull the bottom tap down to flip up the UPS as shown.
2. Remove all green connector blocks to the TRM. Use a screw driver to pull the bottom tap of the TRM down to remove it.
3. Mount the DIN-rail (Power pack)
4. Re-assemble the Power pack

Connections (see schematic example, section 4.3)

5. Connect Door switch (normally closed, when cabinet door is open) to terminal “2” and “Tamper –“.
6. Optional: Connect a PE-wire from i.e. a ground rod (earth) to the PE terminal on the red DEHN surge device.
   Normally, it is adequate to avoid using this extra PE terminal when the AC supply comes as a standard 3-wire connection including a PE-wire.
7. Connect Pipe, Reference electrode, Shunt resistor, Interrupter/Relay, Transformer/Rectifier output and antennas as described in section 4.1 Installation – TRM module
8. Connect AC grid supply (mains) to the terminals L, N and PE.
   NOTE! The power input to the UPS/battery charger must be connected to the same AC supply as the rectifier to be monitored to ensure that the “T/R Power” alarm works properly. See schematic example, section 4.3.
9. Before connecting the battery, turn on AC grid supply and use a voltmeter to measure the battery charge voltage on terminal “3” (GND) and “4” (Battery +).
10. Adjust the trimmer “+V ADJ” on the UPS/Battery charger according to the optimal charge voltage from the battery datasheet (floating charge voltage, i.e. 13.38 V). Note voltage: _____
11. Turn off the AC grid supply and connect the battery to terminals “3” and “4”:
    “Battery –“ to T.3.
    “Battery+” to T.4.

4.3 Schematic example - Rectifier, TRM & Power pack

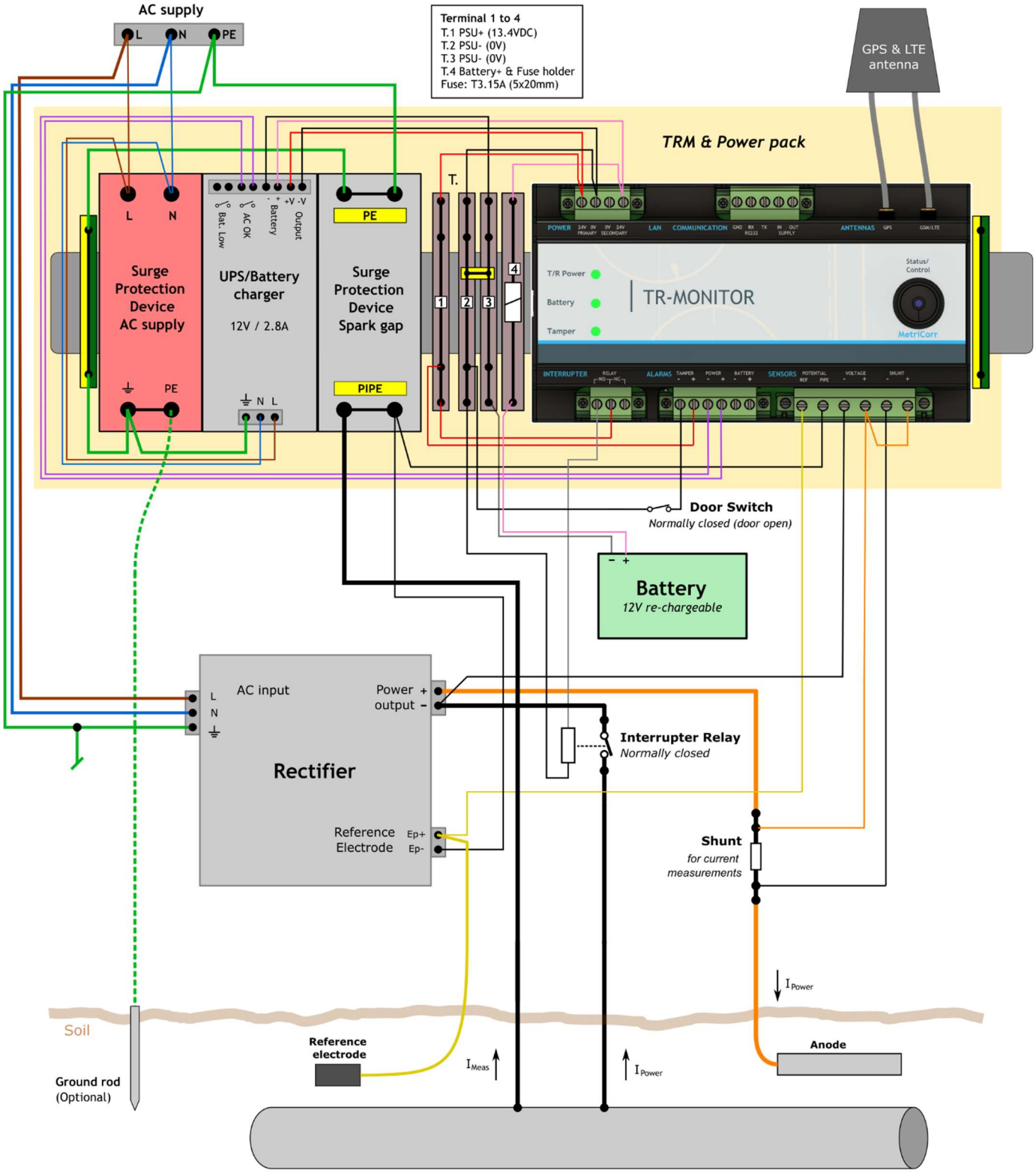

4.4 Schematic example – Extra surge prot. (Rectifier, TRM & Power pack)

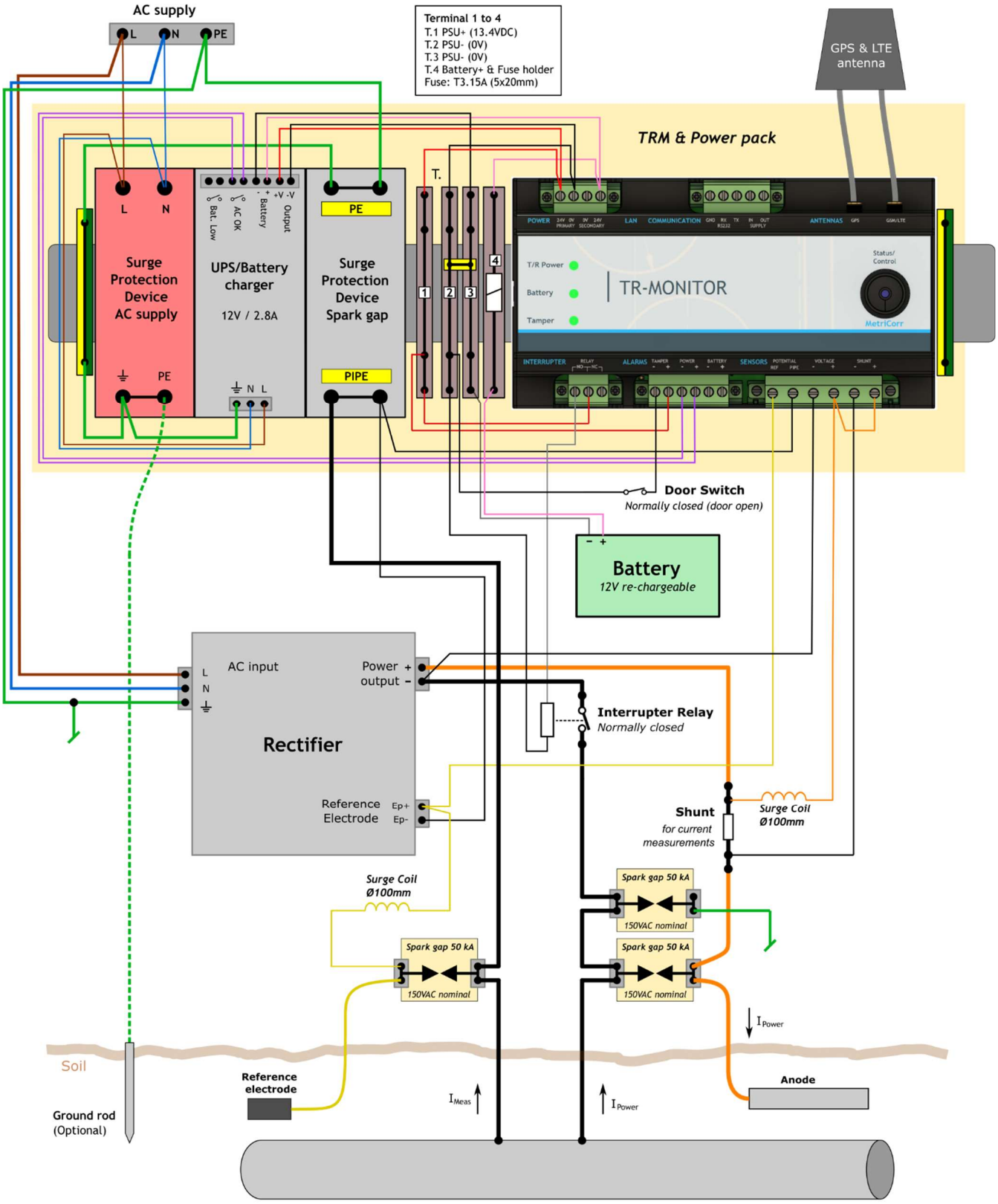

5 Assembled Junction box systems

MetriCorr offers 3 types of assembled junction boxes holding the TRM module, extra surge protection and peripheral components for easy installation:

1. **TR-Monitor Junction box**

   Install next to existing T/R. Prepared cables can be supplied.

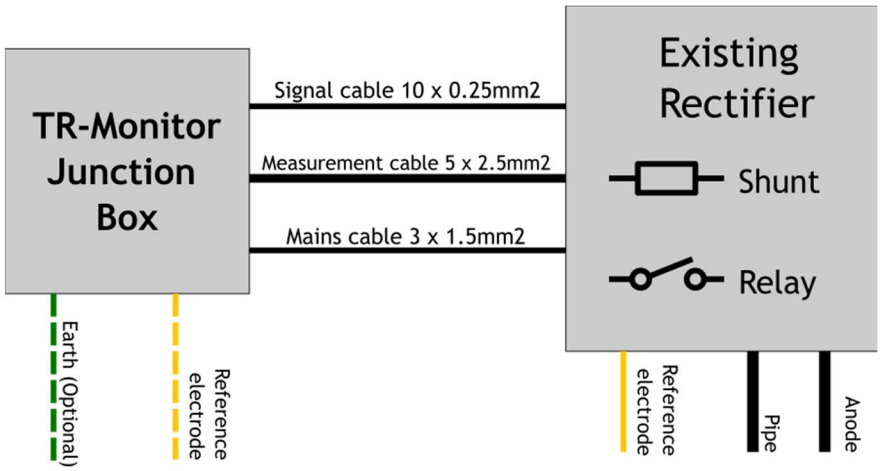

2. **Interrupter & TR-Monitor Junction box**

   Install next to existing T/R.

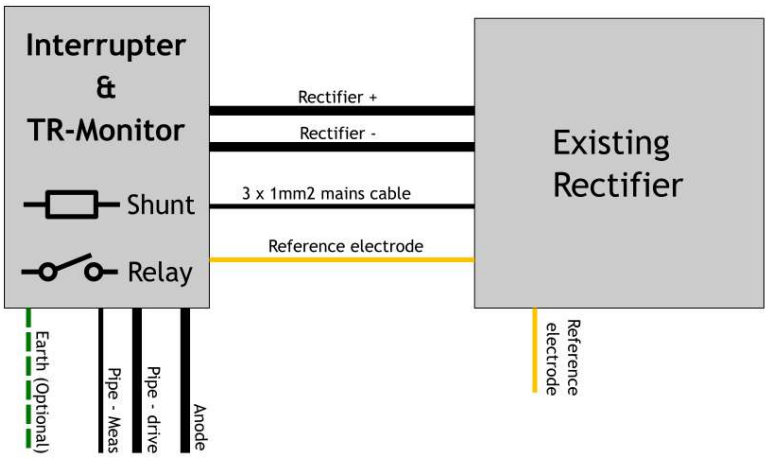

3. **Rectifier & TR-Monitor Junction box**

   One box holding up to 10A regulated rectifier for the pipe or structure to be protected, TRM module, etc.

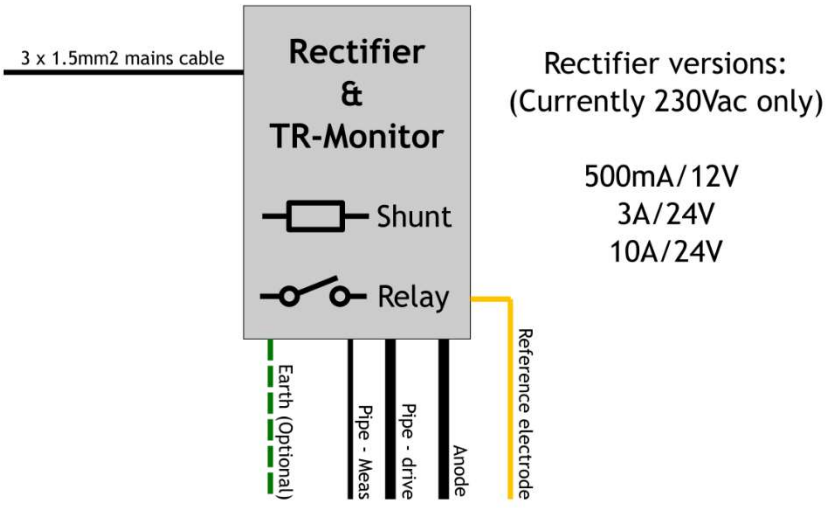

5.1 Features - All types of junction boxes (TRM products)

Extra surge protection

All junction boxes for TRM products holds extra surge protection as described in section 3.2 Extra surge protection (External).

Uninterruptable power supply

All junction boxes for TRM products holds a power pack with UPS/battery charger as described in section 3.1. By default, the junction boxes also hold a 12V/7.2Ah lead crystal battery with a wide temperature range (-40°C to +65°C) and long life expectancy (8-11 years) to provide a backup time +150 hours.

The UPS/battery charger (PSU.1) accepts universal AC supply (90 V to 264V).

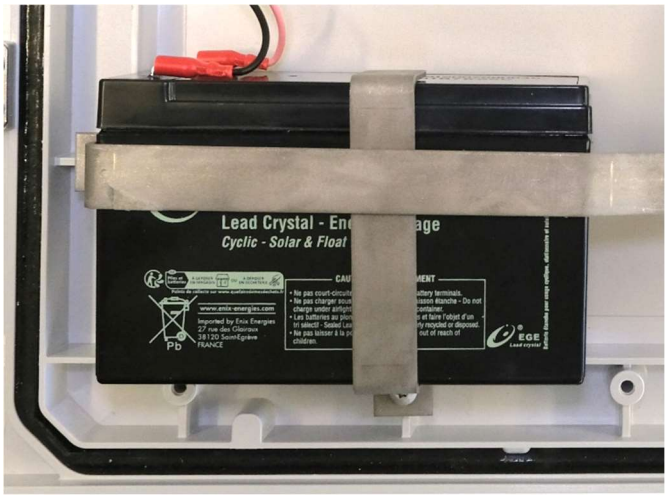

5.1.1 Antennas for Junction boxes

All junction boxes for TRM products hold a built-in dual antenna (LTE & GPS) mounted on top of the cabinet.

Note that the GPS antenna must have direct, unblocked access to the sky to function and enable synchronization in surveys with other MetriCorr RMUs.

External antennas

Optional! Please order separately, contact MetriCorr!

In cases, where the cabinet is installed inside a building or another place without direct access to the sky, an additional GPS antenna with longer cable can be provided. Standard lengths are 3 meters and 5 meters.

Installation:

1. Insert the external antenna cable through one of the dedicated M16 cable glands in the bottom of the cabinet.
2. Replace the internal antenna (GNSS/GPS, blue) with the longer cable from the external antenna.

Note that the cabinet provides two dedicated M16 cable glands for external antennas in case the LTE antenna has to be replaced by an external antenna also. This is rarely the case.



5.1.2 AC grid voltage measuring



Optional! Please specify when ordering!

The AC grid voltage can be measured and viewed in WEBservice by adding an optional power supply (PSU.2) for this purpose as shown to the right.

The TRM module then measures the voltage level from PSU.2.

When ordering, please specify if the AC supply is 115VAC nominal or 230VAC nominal. MetriCorr will then wire the PSU.2 accordingly, which is displayed on the schematics below, and prepare the TRM system in WEBservice in “HW installation” setup.

PSU.2 wired for 230 VAC

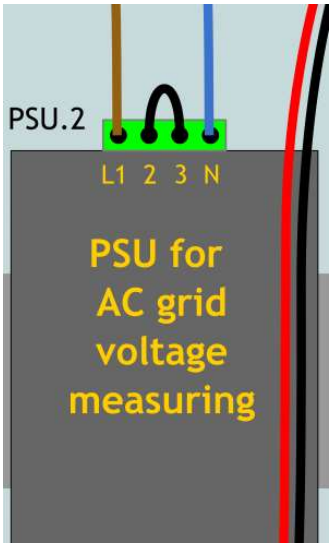

PSU.2 wired for 115 VAC

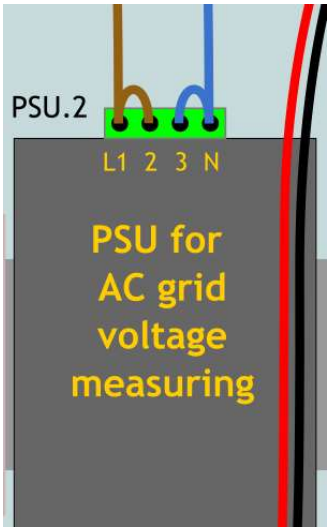

5.2 TR-Monitor Junction Box (40x40x20cm)

MetriCorr provides a junction box (40x40x20cm) that holds a TR-Monitor module with additional components as shown below to be installed next to an existing T/R cabinet that already holds a shunt and interrupter relay.

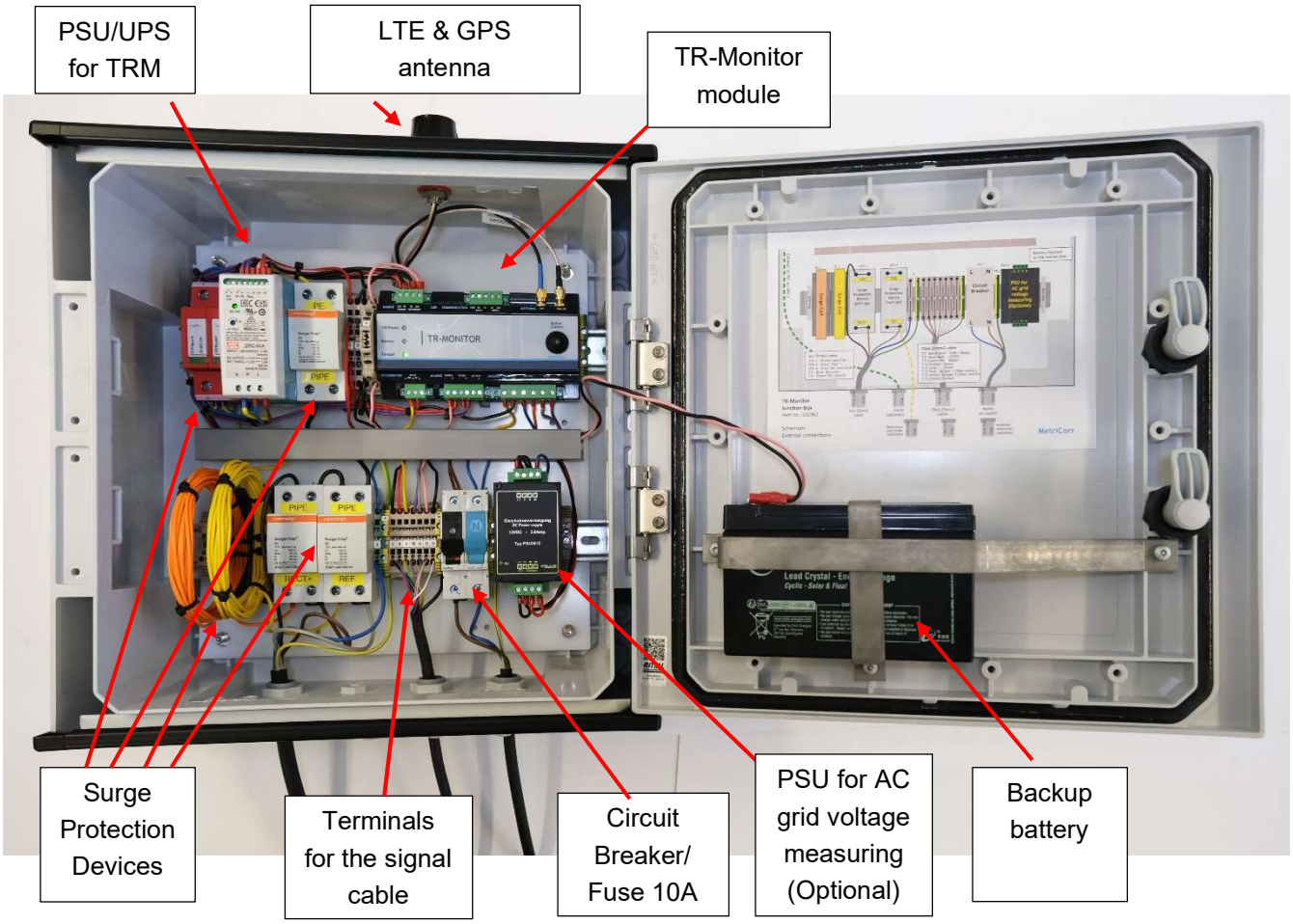

Optional! Please order separately, contact MetriCorr!

MetriCorr can provide three prepared cables to be connected between the existing T/Rr cabinet and the TR-Monitor junction box. Standard lengths are 2 meters and 5 meters.







5.2.1 External connections (TR-Monitor Junction Box)

The schematic below shows how to connect the three external cables, which can be provided by MetriCorr: Measurement cable (5x2.5mm²), Signal cable (10x0.25mm²) and Mains cable (3x1.5mm²).

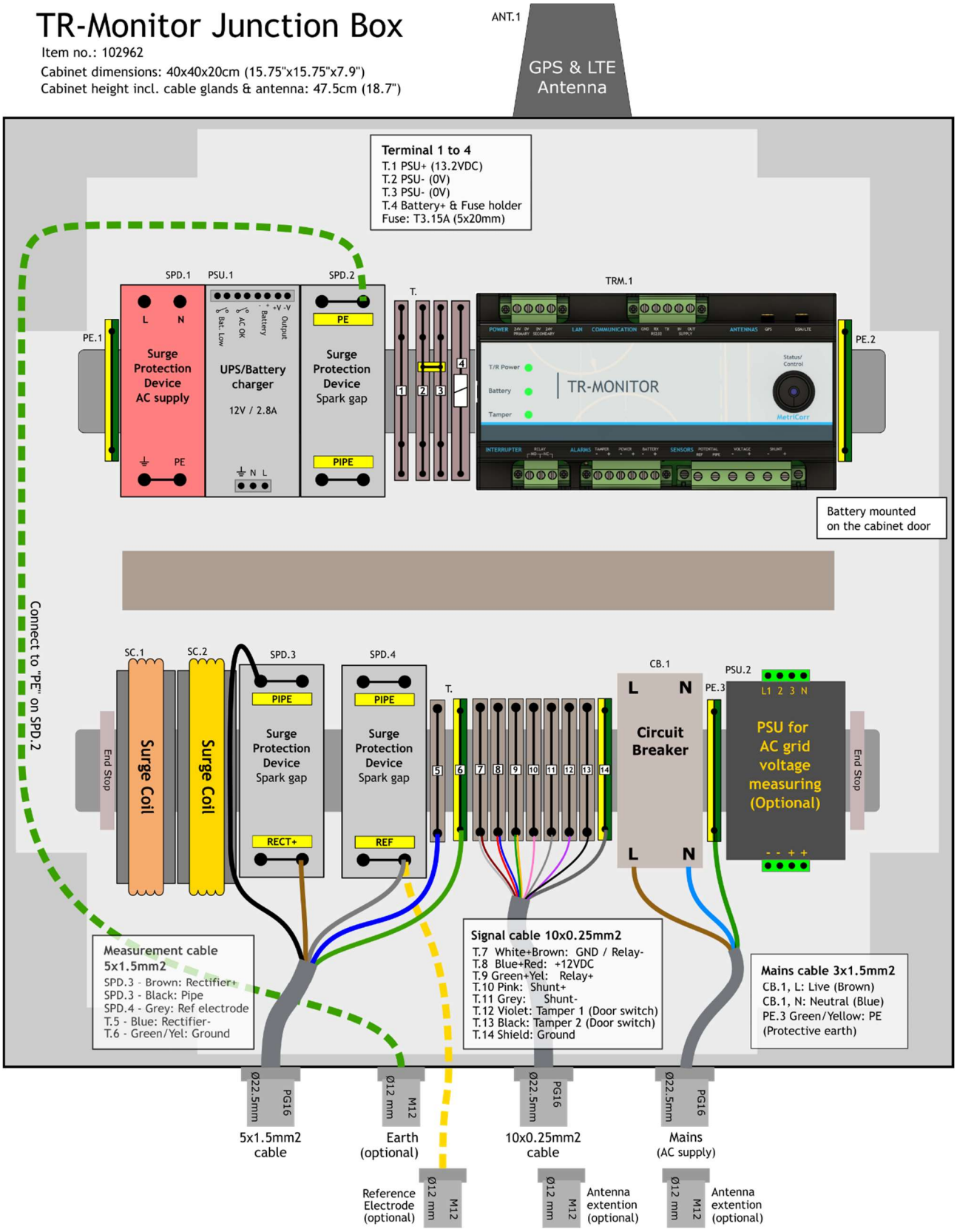

5.2.2 Schematic example – T/R cabinet

The schematic below shows an example of how the three external cables from the TRM junction box can be connected to an existing T/R cabinet with a “Normally closed” Interrupter relay, a shunt connected between rectifier and anode and a door switch (Normally closed when door is open).

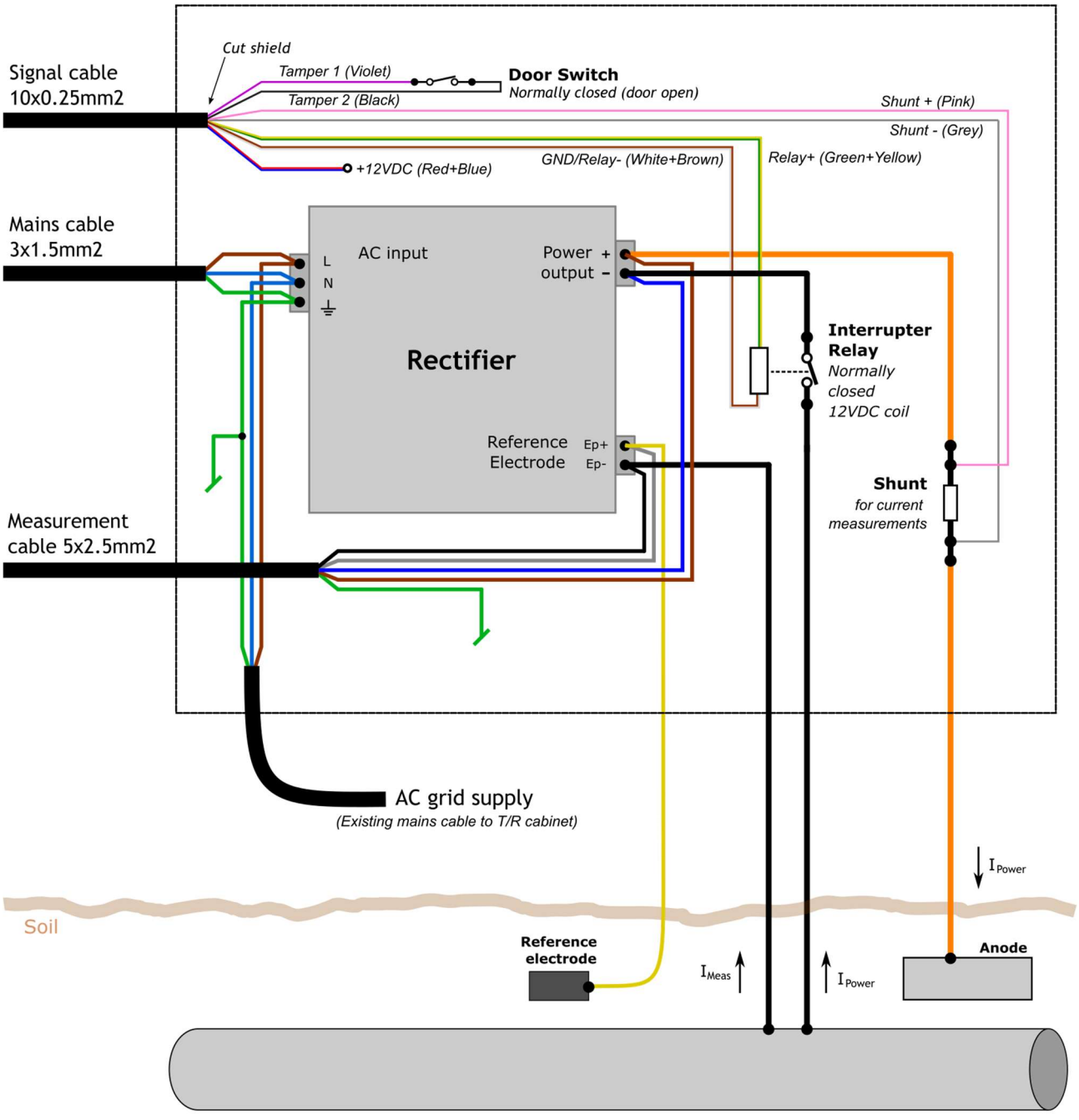

Add shunt value in WEBservice. See section 2.6.

5.2.3 Installation (TR-Monitor Junction Box)

Measurement cable (5x2.5mm²)

1. Connect the BROWN wire from SPD.3 to the positive rectifier terminal.
2. Connect the BLUE wire from T.5 to the negative rectifier terminal.
3. Connect the BLACK wire from the upper terminal on SPD.3 to pipe or structure.
4. Connect the GREY wire from SPD.4 to a reference electrode terminal in the existing rectifier cabinet if any, or connect the reference electrode cable directly to SPD.4 as indicated with the yellow dashed line.
5. Connect the GREEN/YELLOW wire from T.6 to ground/chassis of the rectifier cabinet.

Signal cable (10x0.25mm²)

TRM junction box terminal	Wire color	Tag	Connections inside the existing T/R cabinet
T.7	WHITE/BROWN	GND	Connect the input of the interrupter relay to "GND" and "Relay+". (12VDC)
T.8	BLUE/RED	+12VDC (max 2A)	
T.9	GREEN/YEL	Relay +	
T.10	PINK	Shunt +	Connect the shunt to "Shunt +" and "Shunt –"
T.11	GREY	Shunt -	
T.12	VIOLET	Tamper 1	Example: Connect "Tamper 1 and 2" to a door switch.
T.13	BLACK	Tamper 2	
	Door closed ~ Switch open ~ TRM, Tamper LED = GREEN Door open ~ Switch closed ~ TRM, Tamper LED = RED		
T.14	Shield	GND	Don't connect shield in the T/R cabinet.

Connect the shield of the signal cable to T.14. Normally it is not necessary to connect the shield at the opposite end of the signal cable (rectifier cabinet), since the PE-wire (green/yellow) of the measurement cable (5x2.5mm²) establish ground connection from TR-Monitor junction box to the existing rectifier cabinet.

Note! Make sure that unused wires do not short to ground or each other!

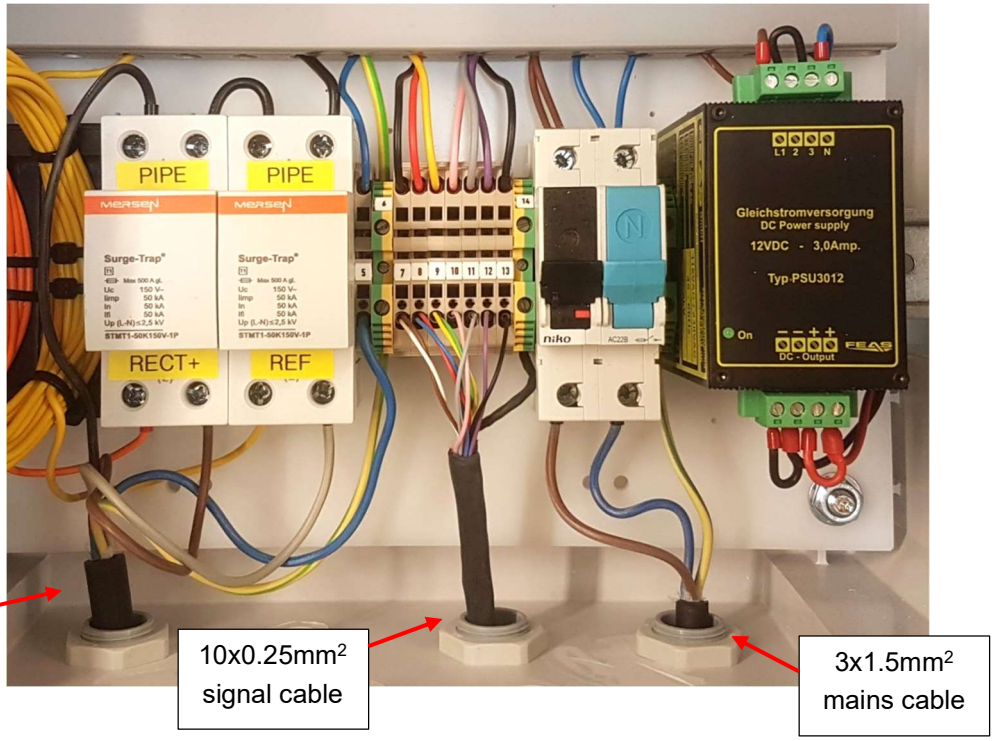

Mains cable (AC supply)

Connect L (BROWN) and N (BLUE) wires to circuitbreaker CB.1 and the GREEN/YELLOW PE-wire to terminal PE.3 (Protective Earth). MetriCorr recommends to connect the mains cable to the same AC grid source (circuit breaker) as the T/R cabinet.

Reference electrode

As shown on the schematics, the grey wire (5x2.5mm2 cable) can be used to connect to the reference electrode via the existing T/R cabinet. However, it is also possible to connect a reference electrode directly to the TRM junction box as indicated with the dashed yellow line on the schematic, section 5.2.1.

Earth wire (optional)

It is possibe to connect an earth wire to a ground rod or other earth connection via an M12 cable gland mounted at the bottom of the TRM junction box (Green dotted line on the schematics). This optional earth connection conducts surge current directly from Pipe to ground protecting the reference electrode and anode.

Battery fuse

Two battery fuses (3.15A) are supplied in a plastic bag held by the cable tray. Open the fuse holder (T.4), insert one of the fuses and close the fuse holder to connect the battery.

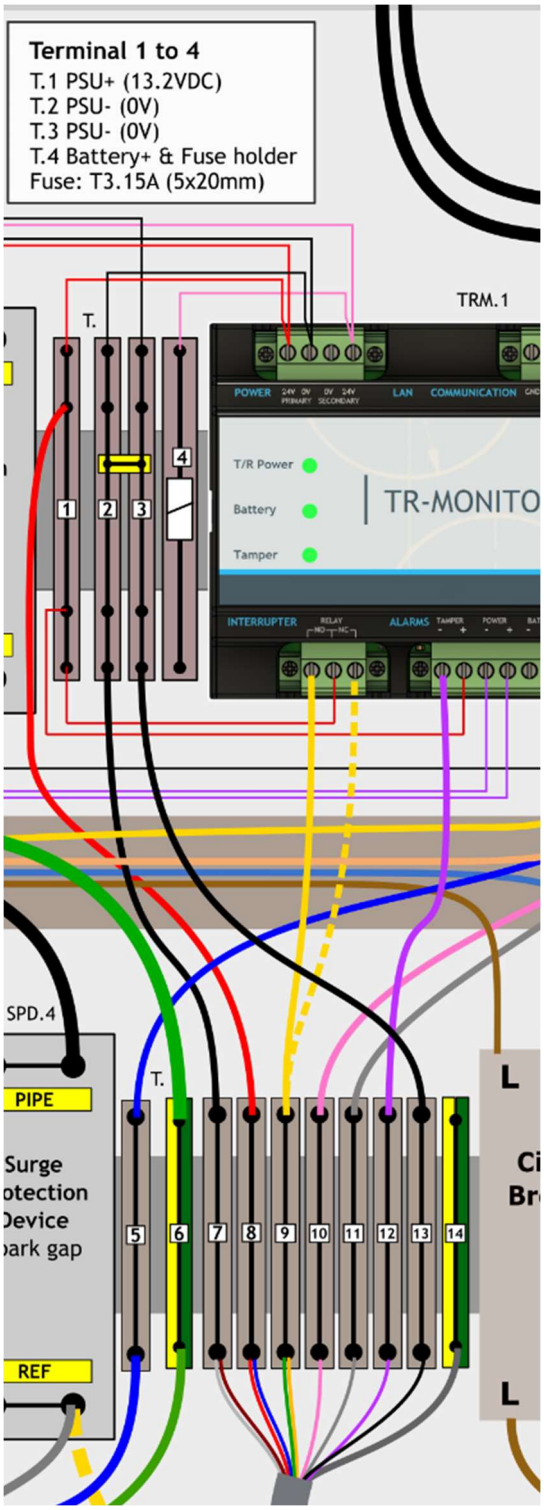

5.2.4 Interrupter relay - NC or NO

The TR-Monitor junction box is per default wired to control a “Normally Closed” interrupter relay as shown in the schematic examples. Here, the connection from T/R to pipe is preserved if the relay control outputs from the TRM-module are removed or damaged.

DC Solid State relays based on mosfets require an input voltage to conduct current from T/R to pipe and are therefore always “Normally Open”. However, the wiring of the TRM junction box can easily be changed to control Solid State relays as interrupters or other “Normally Open” types of relays. Connect the output relay on the TRM module as indicated in the table below and the schematic to the right.

Interrupter relay type	TRM relay output (Yellow wire)
Normally Closed (Mechanical) (AC solid state)	**Connect yellow wire from T.9 to NO** (Solid line)
Normally Open (DC Solid State)	**Connect yellow wire from T.9 to NC** (Dashed line)

Using the TRM backup battery, the TRM module will maintain a voltage output to keep an external solid state relay ON if an AC grid power outage occur.

Fail-safe relay

Using a “Normally open” relay as interrupter in the T/R cabinet, it is possible to install an additional mechanical fail-safe relay in parallel to secure pipe-rectifier connection even if the AC power supply to the “TR-Monitor junction box” fails.

5.2.5 Schematics – TR-Monitor Junction box

Excl. PSU for AC grid voltage measuring

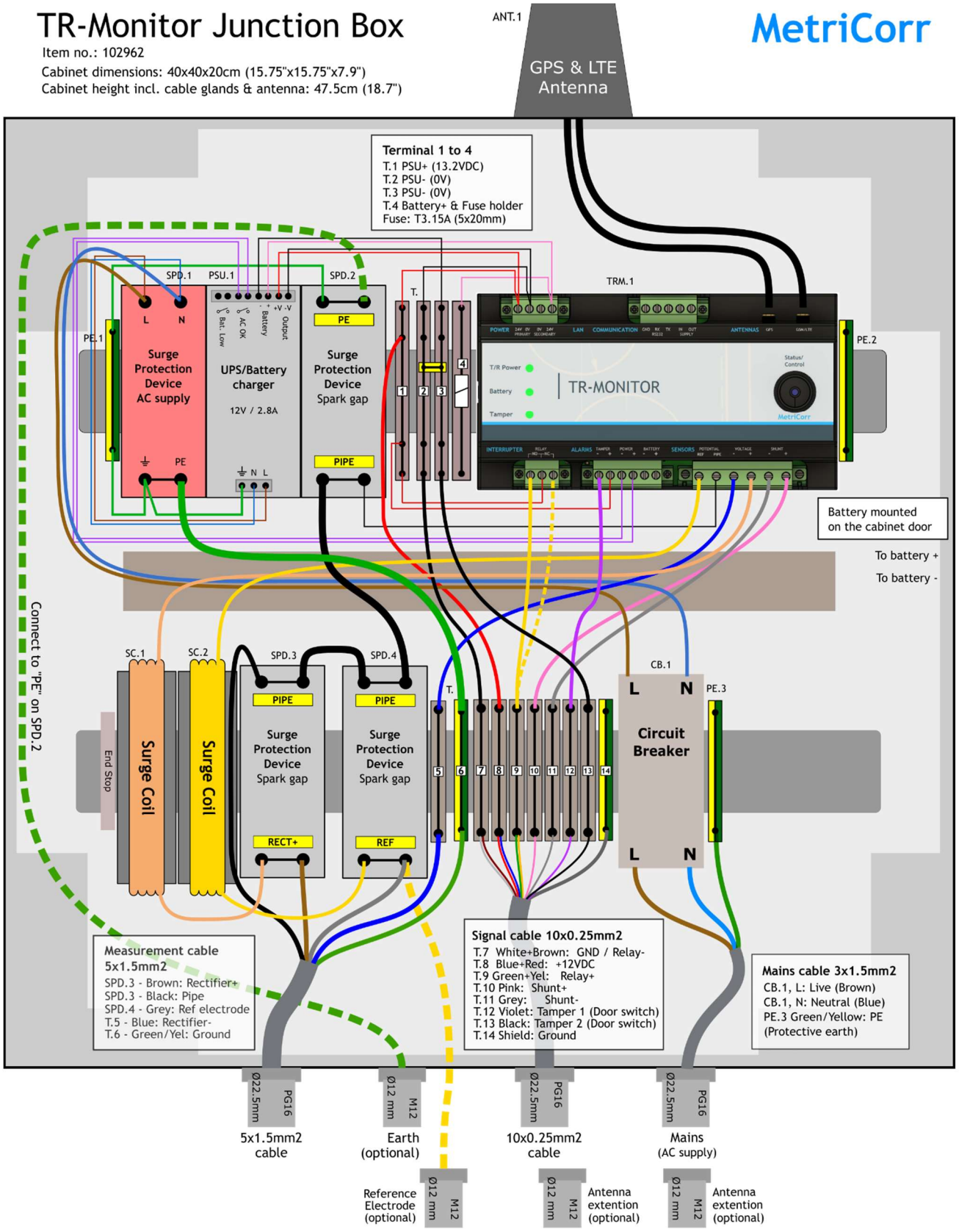

Incl. PSU.2 for AC grid voltage measuring

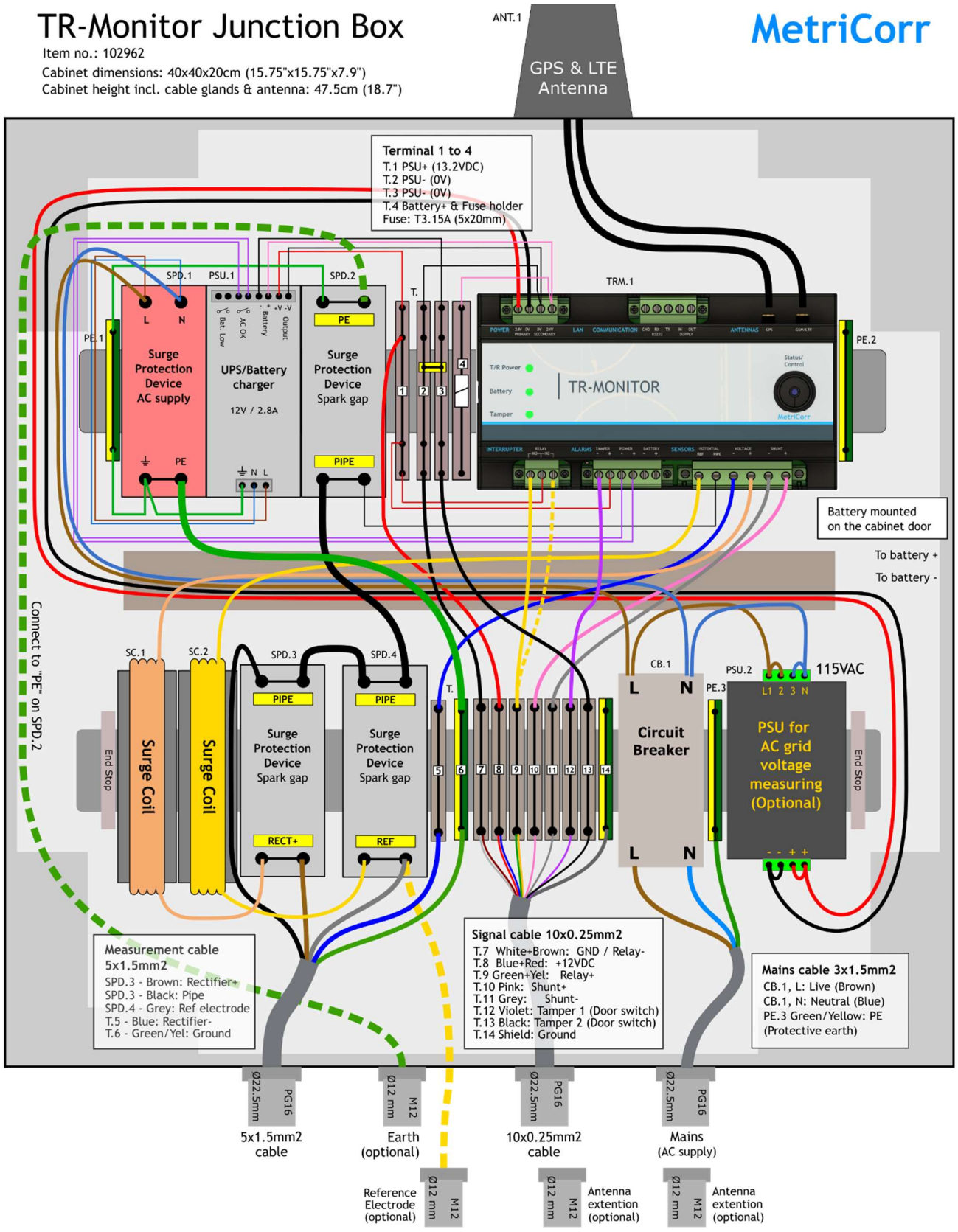

5.3 Interrupter & TR-Monitor Junction box (60x40x20cm)

MetriCorr provides an assembled junction box (60x40x20cm) that holds a 100A (AC or DC) interrupter, shunt and a TRM module with additional components as shown below to be installed next to an existing T/R cabinet.

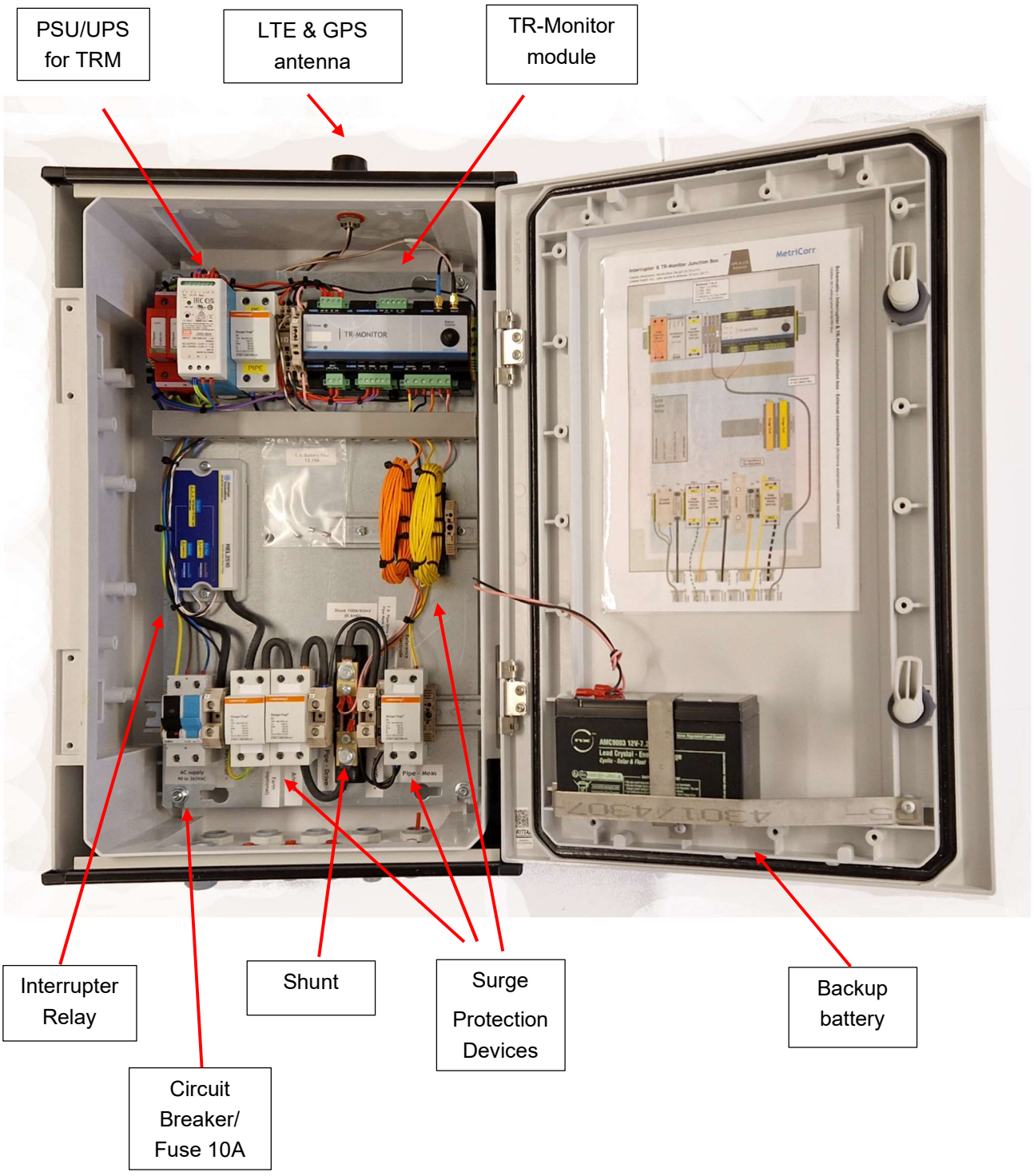

High current cables (up to 100A) from the existing T/R to Pipe and Anode must be led through the Interrupter & TRM junction box as described in the beginning of section 5.

5.3.1 Specifications (Interrupter & TR-Monitor Junction Box)

Note that the load current from the T/R dissipates heat in the Interrupter & TRM junction box from the internal wires, shunt and interrupter relay. The maximum load current must therefore be derated with temperature as indicated in the specifications table below.

Specifications			
Parameter	**Conditions**	**Value**	**Comment**
Load Current (Continuous)	Ambient temperature: 25 ℃ (77 F), max.	Max. 100 A	Limited by interrupter relay max temperature of 45 ℃. Total power dissipation in cabinet is 43W (delta T = 20 ℃)
	Ambient temperature: 50 ℃ (122 F)	Max. 70 A	Limited by interrupter relay max temperature of 60 ℃. Total power dissipation in cabinet is 26W (delta T = 10 ℃)
	Ambient temperature: 60 ℃ (122 F)	Max. 40 A	Limited by the max. temperature of the internal battery of 65 ℃. Total power dissipation in cabinet is 13W (delta T = 5 ℃)
Load Voltage		Max. 100 Vpeak Max. (70 Vrms)	Limited by the internal interrupter relay
Ambient Temperature range	Without load current derating	- 30 ℃ to + 65 ℃	Limited by internal components.
Surge protection	Surge discharge current (8/20us)	50 kA	
	Lightning Impulse Current (10/350us)	50 kA	
Shunt	Rating	100A/60mV	Add shunt value in WEBservice. See section 2.6.
	Resistance	0.6 mΩ	
Cabinet dimensions	H:60xW:40xD:20cm (26.62" x 15.75" x 7.9") Height incl. cable glands & antenna: 47.5cm (18.7")		
External cable dimensions	Rectifier-, Rectifier+, Anode, Pipe-Drive, Pipe-Meas, Reference electrode, Earth		**Conductor cross sectional area, max:** Stranded wire 25 mm^2 Rigid wire 35 mm^2

5.3.2 Installation (Interrupter & TRM Junction box)

All cables must be inserted through cable glands in the bottom of the cabinet. The terminals on the lower DIN-rail shown on the picture below accepts heavy gauge wires for Rectifier, Anode, Pipe and Reference electrode cables.

Connect all cables according to the labels on the rear plate and the schematic found on the inside of the cabinet door and in section 5.3.3.

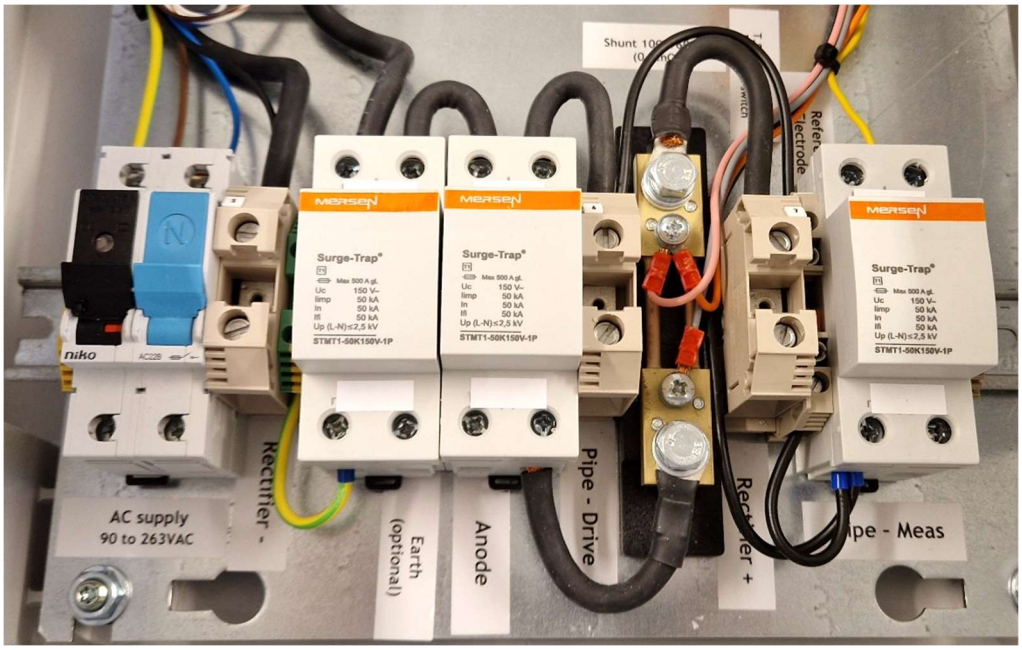

Pipe connections (Drive and Meas)

The Interrupter & TRM Junction box is designed to accept two wires from the pipe/structure; one for the for T/R current called “Pipe-Drive” and one for measurements called “Pipe-Meas”. However, if there’s only one wire from the pipe/structure for a given installation, “Pipe-Drive” to “Pipe-Measurement” must be connected to each other, which is done by the “orange screw” in switch-terminal T.8. (Use a slotted screw-driver). The cabinet is shipped with the switch in “open” position as shown on the picture to the right.

Switch Closed: Up position

Switch Open: Down position

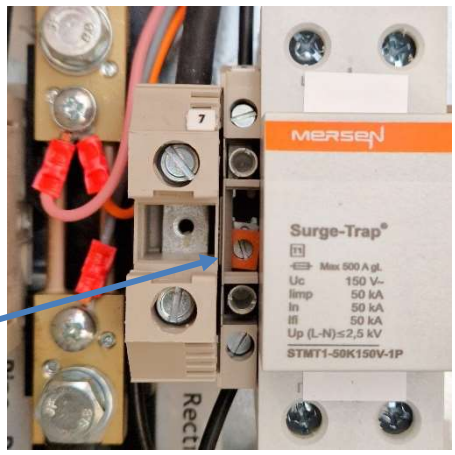

Mains cable (AC supply)

Connect L (Phase) and N (Neutral) wires to circuitbreaker CB.1 and the PE-wire to terminal PE.3 (Protective Earth). MetriCorr recommends to connect the mains cable to the same AC grid source as the T/R cabinet.

Earth (optional)

It is possibe to connect an earth wire to a ground rod or other earth connection via an M16 cable gland mounted at the bottom of the TRM junction box. This optional earth connection conducts surge current directly from Pipe to ground protecting the reference electrode and anode.

Tamper (Door Switch)

If a door switch is mounted in the existing T/R cabinet, a cable from the door switch to the Interrupter & TRM Junction box can be inserted through the dedicated M16 cable gland and connected to the terminals:

"T.3" (ground)

"Tamper –" on the TRM.

T/R door	Door switch	TRM Tamper LED
Closed	Open	Green
Open	Closed	Red

Mechanical Failsafe Relay (Optional)

Normally, the Interrupter & TRM Junction box is connected to the same AC supply as the T/R to be monitored. If the AC supply is down, there's typically no reason to ensure the electric connection from T/R to pipe, since the T/R will not provide any current to the pipe. Therefore there's no need for a mechanical fail-safe relay.

The backup battery in the Interrupter & TRM Junction box will ensure that the interrupter relay will maintain the connection from T/R to pipe for around 150 to 160 hours. Hereafter, the connection will be open.

However, if a special installation requires a failsafe relay that ensures connection from T/R to Pipe, MetriCorr can install a mechanical failsafe relay in the Interrupter & TRM junction box.

Battery fuse

Two battery fuses (3.15A) are supplied in a plastic bag held by the cable tray. Open the fuse holder (T.4), insert one of the fuses and close the fuse holder to connect the battery.

5.3.3 Schematics (Interrupter & TRM Junction Box)

Schematics for the different configurations of the Interrupter & TRM Junction Box are shown on the following pages.

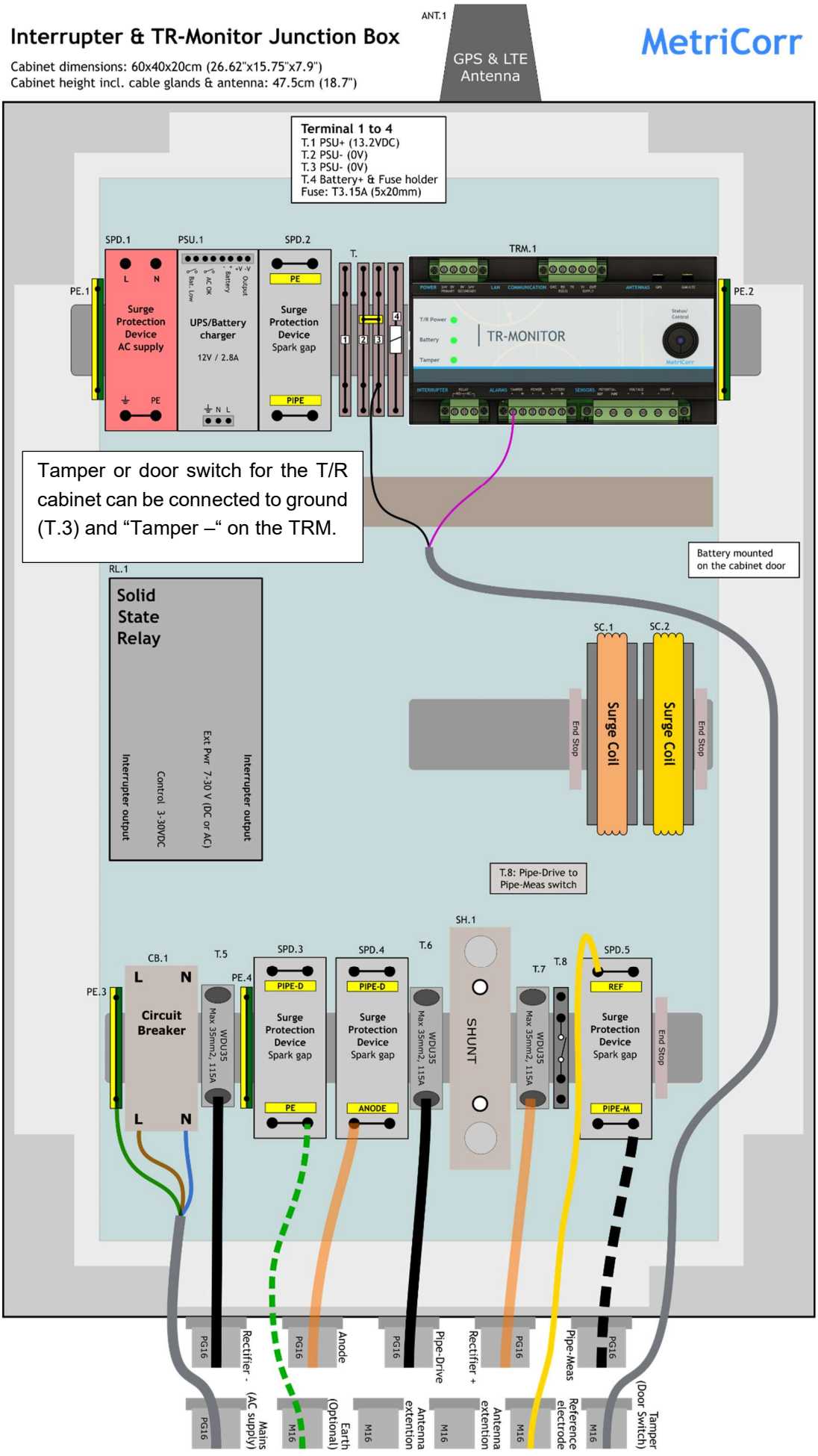

Schematic – Interrupter & TR-Monitor Junction BoxExter
External wiring only

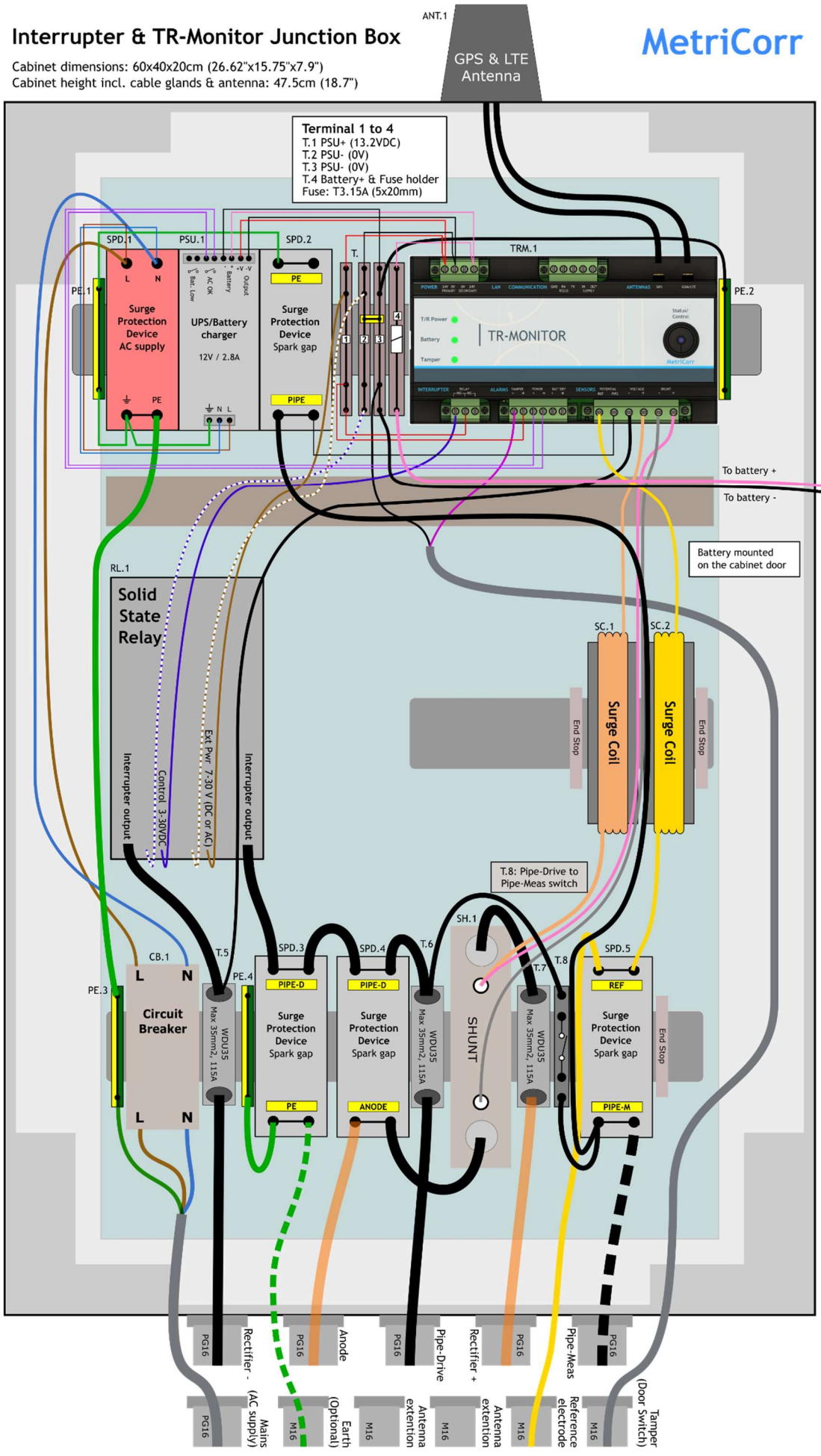

Schematic – Interrupter & TR-Monitor Junction Box

All wiring shown

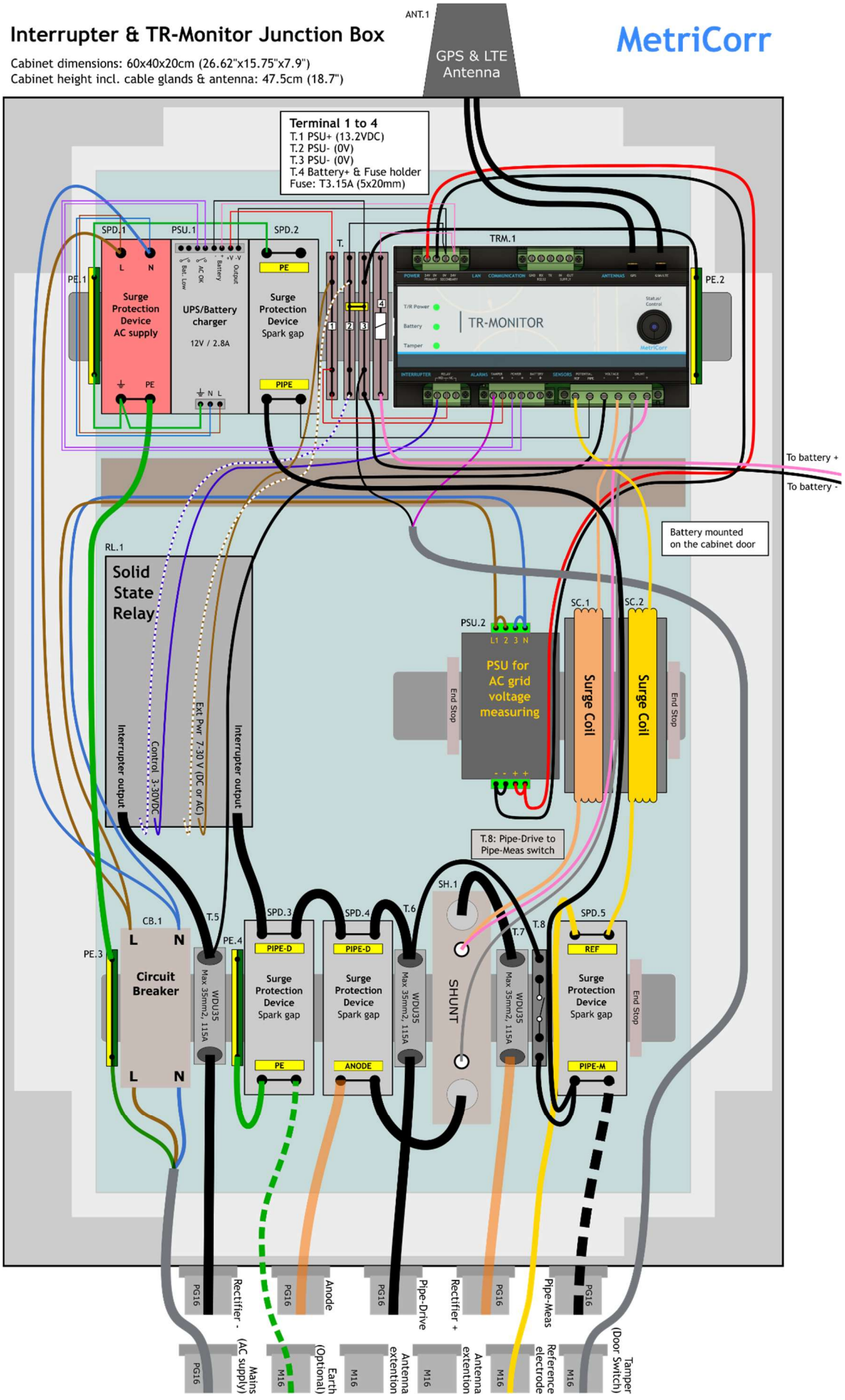

Schematic – Interrupter & TR-Monitor Junction Box
Including PSU.2 for AC grid voltage measuring

Please visit:





MetriCorr

Toerringvej 7
2610 Rodovre
Denmark
Phone: +45 92 80 80
Email: support@metricorr.com