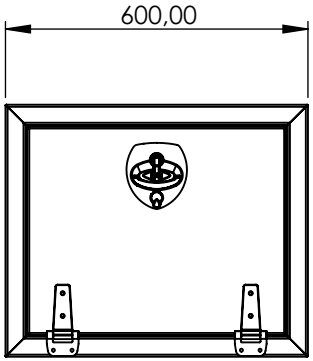

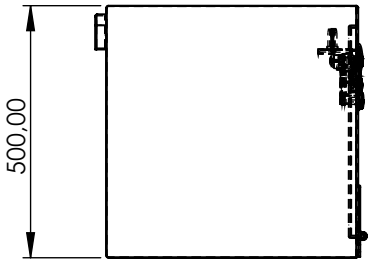

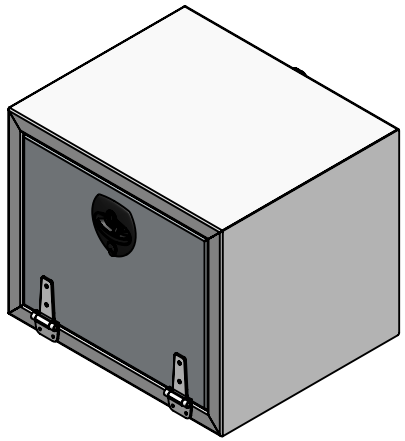

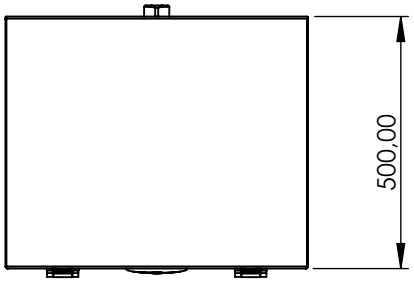

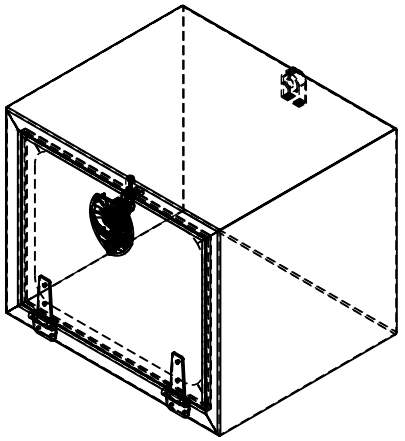

ITEM NO.	PART NUMBER	DESCRIPTION	QTY.
1	4120605050-Lada		1
2	4120605050-Lucka		1
3	Bygel-Gångjärn-412		2
4	Vector-T-Handle-1P	T-Handtag Infällt 1P 54	1
5	IP-Ventilation	IP Ventilation	1

Rev.Nr	Revisionsanmärkning	Datum	Sign.
1			

KRIMA by sweden

Tolerances, if not indicated, according to: ISO 13920-CG		Material: RF			Thickness: 1,5mm
Design.	Drawn	Date: 2026-01-08	Format	Scale: 1:15	
Description: Model			Mass (kg): 21.4		Revision
		Drawing nr: 4120605050			Sheet: 1/1

This document must not be copied without our written permission and the contents thereof must not be imparted to a third party nor nor be used for any unauthorized purpose. Contravention will be prosecuted. New Time AB