Smart String Inverter
SUN2000-506KTL-H1/H3



Max. Efficiency
≥99%

Smart Connector-level
Detection (SCLD)

Smart Self-cleaning
Fan (SSCF)

Smart IV Curve
Diagnosis Supported

Smart String-level
Disconnection (SSLD)

Smart Hybrid Cooling
System

Smart
Anti-icing Fan

Grid-forming
Supported

Efficiency Curve

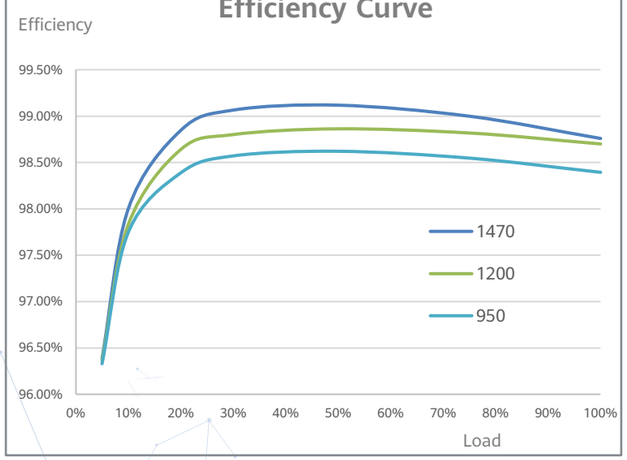

Electrical Schematic

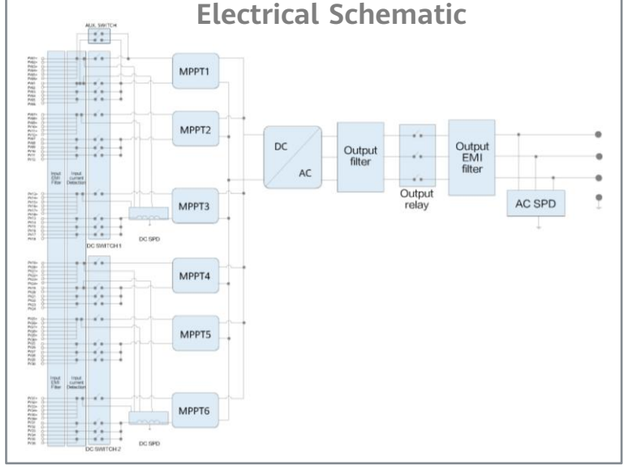

Technical Specifications

Efficiency	
Max. Efficiency	99.1%
European Efficiency	98.8%
Input	
Max. Input Voltage[1]	1500 V
Number of MPPT	6
Max. Current per MPPT	105 A
Max. Short Circuit Current per MPPT	180 A
Max. PV Inputs per MPPT	6
MPPT Operating Voltage Range	500 V ~ 1500 V
Nominal Input Voltage	1200 V
Output	
Nominal AC Active Power	460,000 W
Max. AC Apparent Power	506,000 VA
Max. AC Active Power (cosϕ=1)	506,000 W
Nominal Output Voltage	1000 V, 3W + PE
Rated AC Grid Frequency	50 Hz / 60 Hz
Nominal Output Current	265.6 A
Max. Output Current	292.2 A
Adjustable Power Factor Range	0.8 LG ... 0.8 LD
Total Harmonic Distortion	THDi < 1% (Rated)
Protection	
Smart String-level Disconnection (SSLD)	Yes
Smart Connector-level Detection (SCLD)	Yes
AC Overcurrent Protection	Yes
DC Reverse-polarity Protection	Yes
PV-array String Fault Detection	Yes
Smart Self-Cleaning Fan/Intelligent Fan Anti-Icing	Yes
AC/DC Surge Arrester	Type II
DC Insulation Resistance Detection	Yes
Residual Current Detection Unit	Yes
Communication	
Display	LED Indicators
RS485	No
MBUS	Yes
General	
Dimensions (W x H x D)	1065 x 800 x 400 mm
Weight (with mounting plate)	130 kg
Operating Temperature Range	-25 ℃ ~ 60 ℃
Cooling Method	Smart Air Cooling
Max. Operating Altitude without Derating[2]	5000 m (> 4000 m Derating)
Relative Humidity	0 ~ 100% (Non-condensing)
DC Connector	HH4SFD4TMS / HH4SMD4TMS
AC Connector	Support OT / DT Terminal
Noise Level	75dB in Typical
Protection Degree	IP 66
Anti-corrosion Protection	C5-Medium
Topology	Transformer Less
Standards Compliance	
IEC 62109-1/-2, IEC 62920, IEC 60947-2, EN 50549-2, IEC 61683, etc.	

1. The withstand voltage on the DC side of the inverter can reach 1600V.
2. The inverter will not operate at derating power with the altitudes at / under 4000 m.

Smart String Inverter

SUN2000-506KTL-H2



Max. Efficiency
≥99%

Smart Connector-level
Detection (SCLD)

Smart Self-cleaning
Fan (SSCF)

Smart IV Curve
Diagnosis Supported

Smart String-level
Disconnection (SSLD)

Smart Hybrid Cooling
System

Smart
Anti-icing Fan

Grid-forming
Supported

Efficiency Curve

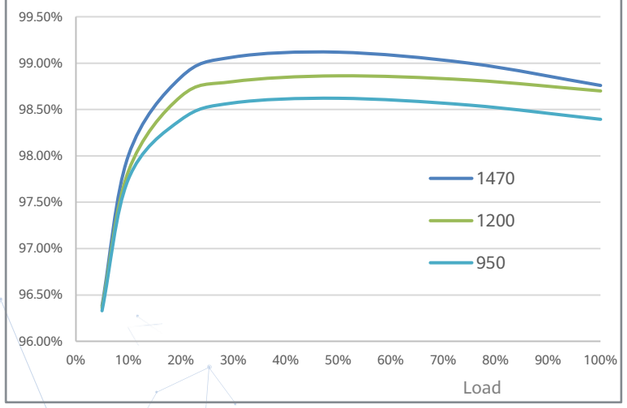

Electrical Schematic

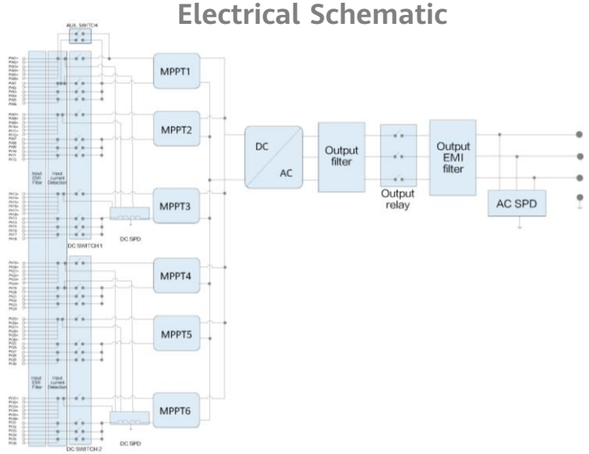

Technical Specifications

Efficiency	
Max. Efficiency	99.1%
European Efficiency	98.8%
Input	
Max. Input Voltage[1]	1500 V
Number of MPPT	6
Max. Current per MPPT	105 A
Max. Short Circuit Current per MPPT	180 A
Max. PV Inputs per MPPT	6
MPPT Operating Voltage Range	500 V ~ 1500 V
Nominal Input Voltage	1200 V
Output	
Nominal AC Active Power	420,000 W (50℃)
Max. AC Apparent Power	506,000 VA
Max. AC Active Power (cosϕ=1)	506,000 W
Nominal Output Voltage	1000 V, 3W + PE
Rated AC Grid Frequency	50 Hz / 60 Hz
Nominal Output Current	242.5 A
Max. Output Current	292.2 A
Adjustable Power Factor Range	0.8 LG ... 0.8 LD
Total Harmonic Distortion	THDi < 1% (Rated)
Protection	
Smart String-level Disconnection (SSLD)	Yes
Smart Connector-level Detection (SCLD)	Yes
AC Overcurrent Protection	Yes
DC Reverse-polarity Protection	Yes
PV-array String Fault Detection	Yes
Smart Self-Cleaning Fan/Intelligent Fan Anti-Icing	Yes
AC/DC Surge Arrester	Type II
DC Insulation Resistance Detection	Yes
Residual Current Detection Unit	Yes
Communication	
Display	LED Indicators
RS485	No
MBUS	Yes
General	
Dimensions (W x H x D)	1065 x 800 x 400 mm
Weight (with mounting plate)	130 kg
Operating Temperature Range	-25 ℃ ~ 60 ℃
Cooling Method	Smart Air Cooling
Max. Operating Altitude without Derating[2]	5000 m (> 4000 m Derating)
Relative Humidity	0 ~ 100% (Non-condensing)
DC Connector	HH4SFD4TMS / HH4SMD4TMS
AC Connector	Support OT / DT Terminal
Noise Level	75dB in Typical
Protection Degree	IP 66
Anti-corrosion Protection	C5-Medium
Topology	Transformer Less
Standards Compliance	
IEC 62109-1/-2, IEC 62920, IEC 60947-2, EN 50549-2, IEC 61683, etc.	

1. The withstand voltage on the DC side of the inverter can reach 1600V.
2. The inverter will not operate at derating power with the altitudes at / under 4000 m.