FIMER



Bidirectional converter PVS980-58BC

FIMER bidirectional converter, PVS980-58BC, is aimed at large-scale grid connected energy storage applications. The converters are available from 1738 kVA up to 2500 kVA. PVS980-58BC bidirectional converter is based on the world's leading converter platform used also in FIMER solar inverters ensuring high performance, reliability, and availability of global service support

World's leading inverter platform

Like FIMER inverters, the PVS980-58BC bidirectional converter has been developed based on decades of experience in the industry and proven technology platform. Unrivaled expertise from the world's market and technology leader in frequency converters is the hallmark of the PVS980-58 series.

The PVS980-58BC bidirectional converter is one of the most efficient and cost-effective ways of converting the direct current (DC) generated by batteries into high quality and CO_2-free alternating current (AC) that can be fed into the power distribution network.

PVS980-58 bidirectional converter from FIMER

FIMER PVS980-58BC bidirectional converters are ideal for multi-megawatt energy storage systems, providing maximum grid stability for power plants with intermittent energy sources.

For power plants combining photovoltaics and energy storage, the common platform shared with PVS980-58 solar inverter and PVS980-58BC bidirectional converters brings synergies in both the availability of service and support personnel and the spare part logistics

Highlights

- High total performance
- Modular product design
- High DC input voltage up to 1500 V_{DC}
- Extensive DC and AC side protection
- Easy to commission, no separate chiller installation
- Fast and easy AC coupling to transformer by busbars
- Versatile design for large-scale plants to minimize system costs
- Complete range of industrial data communication options, including remote monitoring
- Life cycle service and support through FIMER's extensive global service network

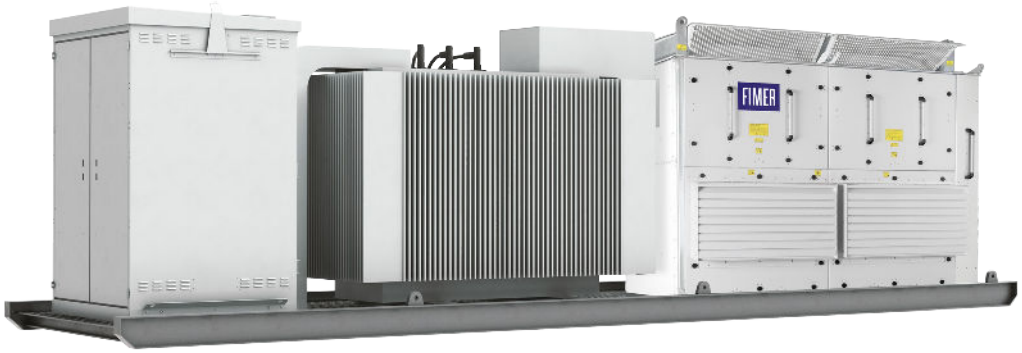

Maximum energy revenues

FIMER bidirectional converters have a high total efficiency . Precise, optimized system control combined with the unit's highly efficient power converter design deliver the maximum energy from the batteries to the power distribution network. For end users, this generates the highest possible revenues from the energy sales.

Patented cooling system

PVS980-58BC converter utilizes patented self-contained cooling system in power module cooling. This innovative, low-maintenance cooling solution is also used in other industrial applications and is designed for demanding environments.
The cooling system needs no separate commission and it ensures outstanding endurance.

Compact and modular design

PVS980-58BC converters are designed for fast and easy installation. The industrial design and modular platform provide a wide range of options, such as remote monitoring, fieldbus connection and modular and flexible DC input connections. PVS980-58BC converters are customized for the needs of end users and will be available with short delivery times

Versatile design for large-scale Projects to minimize system costs

FIMER's PVS980-58BC bidirectional converters enables system integrators to design power plants that use the optimum combination of converters with different power ratings. Equipped with extensive electrical and mechanical protection, the converters are engineered to provide a long and reliable service life of at least 25 years.

Advanced grid support features

The PVS980-58BC software includes all the latest grid support and monitoring features, including active power limitation, fault ride through (FRT) with current feed-in and reactive power control.
Active and reactive power output can be controlled by an external control system or automatically by the converter.

All grid support functions are parameterized, allowing easy adjusting for local utility requirements. FIMER bidirectional converters are also able to support grid stability at night by providing reactive power with the DC input disconnected.

Technical data and types

Product Type designation, PVS980-58HC	PVS980-58HC-1738-F	PVS980-58HC-1883-F	PVS980-58HC-2028-G	PVS980-58HC-2173-I	PVS980-58HC-2282-I	PVS980-58HC-2390-K	PVS980-58HC-2500-I
Input (DC)							
DC voltage operating range, (UDC) [1]	680 to 1500 V	737 to 1500 V	794 to 1500 V	850 to 1500 V	893 to 1500 V	935 to 1500 V	978 to 1500 V
Full power DC voltage range, (UDC) @ 51 °C [4]	680 to 880 V	737 to 950 V	794 to 1020 V	850 to 1100 V	893 to 1100 V	935 to 1100 V	978 to 1100 V
Max DC short circuit withstand	73 kApeak, 17 MA2s, external aR fuses required between converter and PFSS						
Number of protected DC inputs [3]	10						
Maximum operational DC current	2650 A						
Maximum operational DC voltage (Umax (DC)) [2]	1500 V						
Output (AC)							
Power @ 25 °C	1738 kVA	1883 kVA	2028 kVA	2173 kVA	2282 kVA	2390 kVA	2500 kVA
AC current @ 25 °C	2091 A						
Power @ 35 °C	1692 kVA	1833 kVA	1974 kVA	2115 kVA	2220 kVA	2326 kVA	2431 kVA
AC current @ 35 °C	2035 A						
Power @ 51 °C	1538 kVA	1666 kVA	1794 kVA	1922 kVA	2018 kVA	2114 kVA	2210 kVA
AC current @ 51 °C	1850 A						
Nominal output voltage (UN (AC)) [4]	480 V	520 V	560 V	600 V	630 V	660 V	690 V
Output frequency [5]	50/60 Hz						
Harmonic distortion, current [6]	< 3%						
Maximum AC short circuit current from network	66 kA (1s RMS)						
Power factor	Four quadrants						
Distribution network type [7]	TN and IT						
Efficiency							
Maximum [8]	98.8%						
Euro-eta [8]	98.6%						
CEC efficiency [8]	98.5%						
Power consumption							
Own consumption in normal operation	2500 W						
Maximum standby operation consumption	230 W						
Auxiliary voltage type	external [10]						

1) Minimum DC (UDC,min) for UN(AC) and power factor=1. The minimum DC voltage depends on AC voltage and power factor. The AC dependency follows formula UDC,min = UAC * √2*1.002
2) Throughout the temperature range
3) Standard 10 DC inputs.
4) +/- 10%, consult FIMER for detailed information
5) +/- 10 Hz
6) At nominal power
7) Inverter side must be IT type
8) Without auxiliary power consumption at min UDC
9) Rounded according to CEC rules
10) Internal available as an option

Technical data and types

Product Type designation, PVS980-58HC	PVS980- 58HC-1738-F	PVS980- 58HC-1883-F	PVS980- 58HC-2028-G	PVS980- 58HC-2173-I	PVS980- 58HC-2282-I	PVS980- 58HC-2390-K	PVS980- 58HC-2500-I
Dimensions and weight							
Width/Height/Depth, mm (W/H/D)	3094/2350/1634						
Weight appr.	Max. 3000 kg						
Environmental limits							
Degree of protection	IP55 Enclosure (IP65 Electronics Section as option)						
Ambient temp. range [11]	-20 ... +50 °C						
Maximum ambient temperature [12]	+60 °C						
Relative humidity	4 ... 100%						
Maximum altitude (above sea level) [13]	4000m[14] Deration to be considered						
Maximum noise level	84 dBA [15]						
Protection							
Ground fault monitoring	Yes						
Grid monitoring	Yes						
Anti-islanding	Yes						
DC reverse polarity	Yes						
AC and DC short circuit and over current	Yes						
AC and DC over voltage and temperature	Yes						
User interface and communications							
Local user interface	Local control panel						
Analog inputs/outputs	2/1 as standard, extendable as engineered option						
Digital inputs/relay outputs	7/1 as standard, extendable as engineered						
option Fieldbus connectivity	Modbus Ethernet TCP/IP [16]						
Product compliance							
Safety and EMC	CE Declaration of Conformity, IEC 62477-1						
Characteristics	IEC60068-2-1,-2,-14,-30, IEC61683, EN50530, IEC61727, IEC62116, IEC62910						
Grid codes	IEC						
Grid support and grid functions	Reactive power compensation, Power reduction, LVRT, HVRT, FqRT						

11) -40 °C as an option
12) Power limiting after 51 °C as an optional model
13) Possible power limiting above 1000 m, depending on temperature
14) Standard device up to 1000m, up to 4000m as an option, considering the deration
15) At partial power typically < 75 dBA
16) More communication options as an engineered option

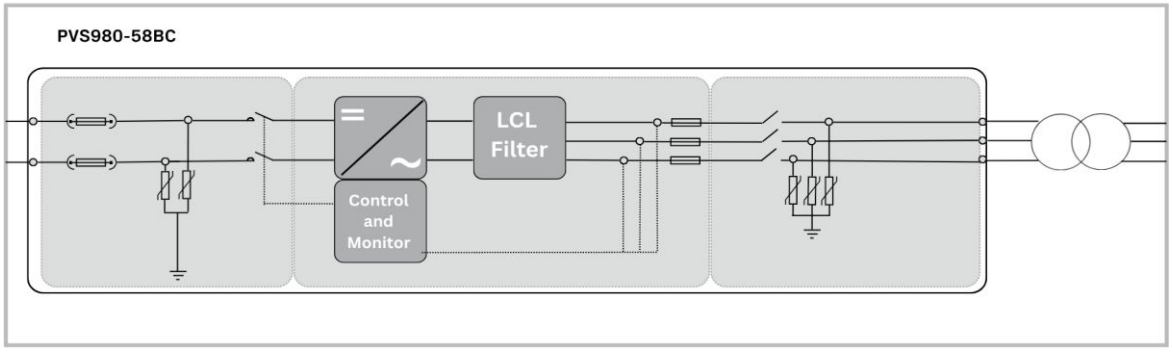

Bidirectional Converters
PVS980-58BC from 1738 to 2500 kVA



High total performance
- High efficiency
- Low auxiliary power consumption
- Innovative controlled cooling
- Long and reliable service life of at least 25 years

Outstanding endurance for outdoor use
- Water-and dustproof outdoor enclosure
- Designed to withstand the toughest environments
- Long and reliable service life following the FIMER life cycle model

Modular industrial design
- Compact and easy-to-maintain product design
- Fast and easy installation
- Integrated and flexible DC input section

Life cycle service and support
- FIMER's extensive global service network
- Extended warranties
- Service contracts
- Technical support throughout the service life

Patented cooling system
- Self-contained, thermosyphon cooled power modules
- Liquid-cooled inverter power ratings with the simplicity of air cooling
- No fillable liquids, pumps, valves, inhibitors, or leaks
- Low maintenance

Versatile design for largescale BESS plants
- Fast AC connection with AC cable
- Integrated DC connection with variable number of inputs
- Wide standard option palette for tailoring

Minimizes system costs
- Very high output power and small footprint allows cost efficient power block designs
- 1500 V_{DC} system voltage
- Integrated protection to minimize external components.
- Fast and easy installation and commissioning

Wide communication options
- Complete range of industrial data communication options for SCADA connections
- Ethernet/Internet Protocol
- Remote monitoring

Comprehensive simulation models
- PSS/E
- PSCAD
- DigSilent

Battery energy storage system example with FIMER PVS980-58BC bidirectional converter

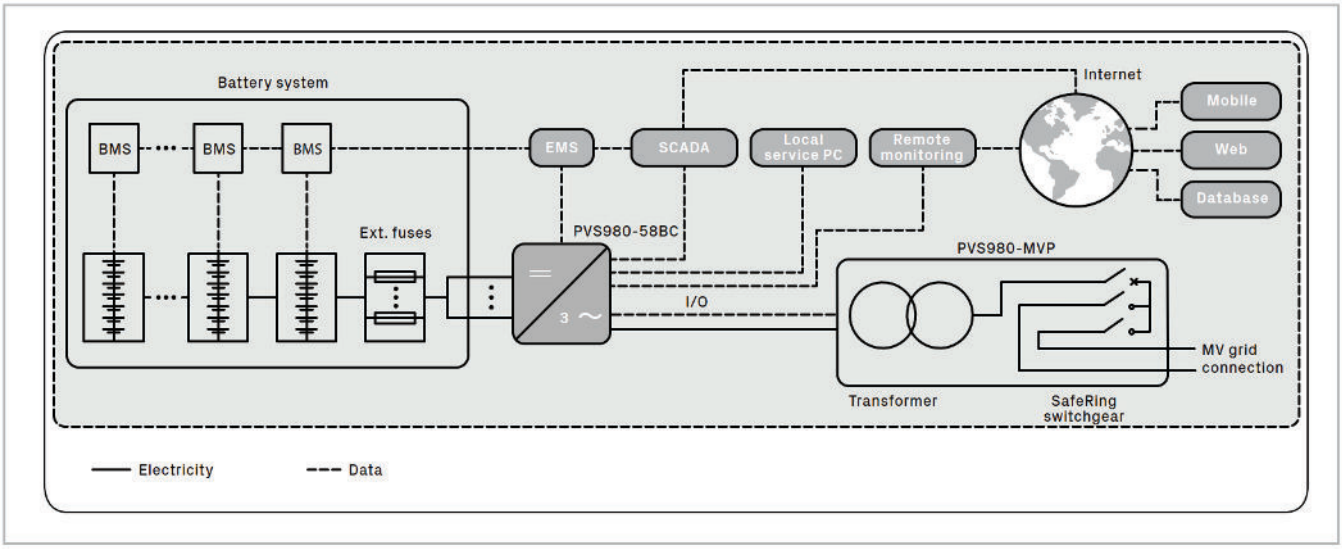

Options

- Integrated and flexible DC input extension
- Heavy duty (Type 1) surge protection
- Various internal auxiliary power supply options up to 10kVA for customer use
- Floating DC
- Fieldbus and Ethernet connections
- High altitude version
- Low temperature version
- Warranty extensions
- Bidirectional PCS care contracts

Related products

- Integrated products, pad mounted- or compact skid solutions
- Remote monitoring solutions

Support and service

FIMER supports its customers with a global service network and provides a complete range of life cycle services from installation and commissioning to preventative maintenance, spare parts, repairs and recycling.

FIMER

For more information please contact
your local FIMER representative or visit:

fimer.com

We reserve the right to make technical changes or modify the contents of this document without prior notice. With regard to purchase orders, the agreed particulars shall prevail. FIMER does not accept any responsibility whatsoever for potential errors or possible lack of information in this document.

We reserve all rights in this document and in the subject matter and illustrations contained therein. Any reproduction, disclosure to third parties or utilization of its contents – in whole or in parts – is forbidden without prior written consent of FIMER. Copyright© 2021 FIMER.