FIMER



Solar inverter
PVS-330-TL

The PVS-330-TL is FIMER innovative photovoltaic inverter designed for large-scale installation. Equipped with smart string-level disconnection, IV curve diagnosis and self-cleaning FAN, it features six built-in MPPT trackers with a current capability up to 65A. Its 330kW maximum power outputs meets the need of utility installations with a MPPT range up to 1500V.

Up to 330 kW

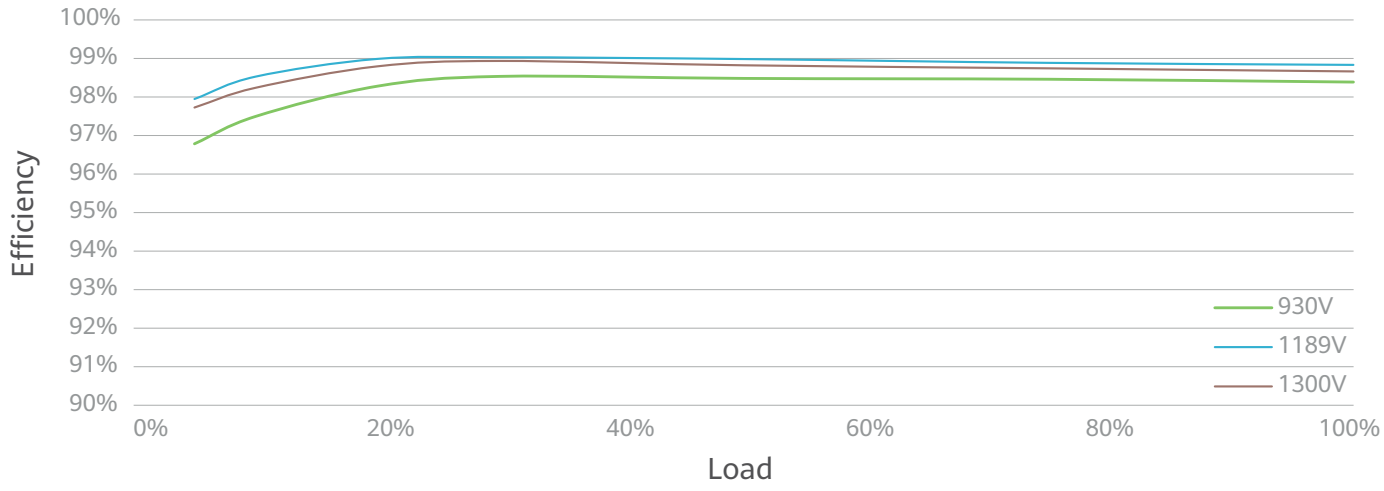
100%
99%
98%
97%
96%
95%
94%
93%
92%
91%
90%
Efficiency
0%
20%
40%
60%
80%
100%
Load
930V
1189V
1300V

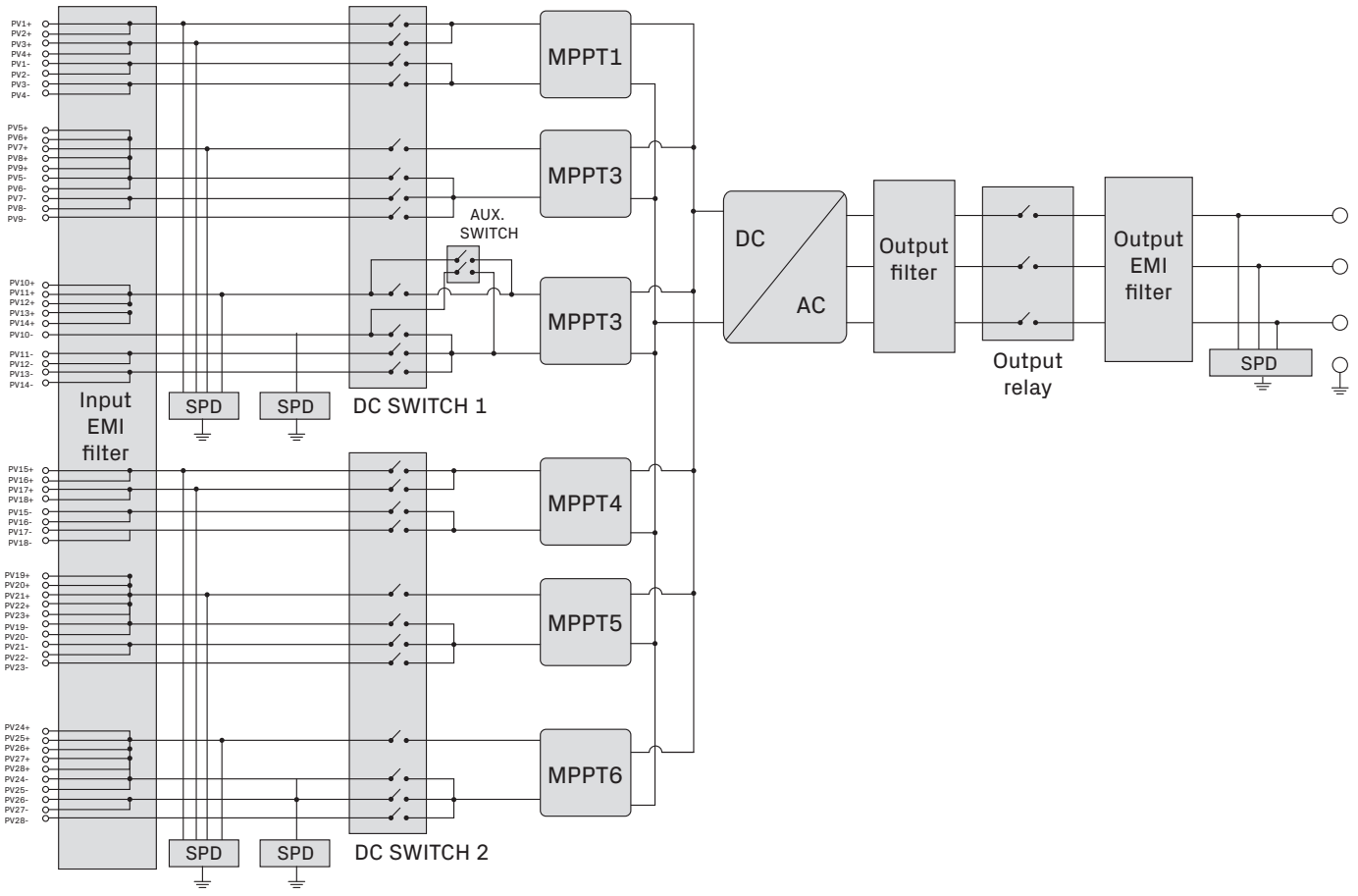
PV1+
PV2+
PV3+
PV4+
PV1-
PV2-
PV3-
PV4-
PV5+
PV6+
PV7+
PV8+
PV9+
PV5-
PV6-
PV7-
PV8-
PV9-
PV10+
PV11+
PV12+
PV13+
PV14+
PV10-
PV11-
PV12-
PV13-
PV14-
PV15+
PV16+
PV17+
PV18+
PV15-
PV16-
PV17-
PV18-
PV19+
PV20+
PV21+
PV22+
PV23+
PV19-
PV20-
PV21-
PV22-
PV23-
PV24+
PV25+
PV26+
PV27+
PV28+
PV24-
PV25-
PV26-
PV27-
PV28-
Input EMI filter
SPD
SPD
DC SWITCH 1
AUX. SWITCH
MPPT1
MPPT3
MPPT3
MPPT4
MPPT5
MPPT6
SPD
SPD
DC SWITCH 2
DC
AC
Output filter
Output relay
Output EMI filter
SPD

Technical data and types

Type code	PVS-330-TL
Input	
Max. Input Voltage	1500 V
Number of MPPT	6
Max. Current per MPPT	65 A
Max. Short Circuit Current per MPPT	115 A
Max. PV Inputs per MPPT	4/5/5/4/5/5
Start Voltage	550 V
MPPT Operating Voltage Range	500 V ~ 1500 V
Nominal Input Voltage	1080 V
Output	
Nominal AC Active Power	300.000 W
Max. AC Apparent Power	330.000 VA
Max. AC Active Power (cosϕ=1)	330.000 W
Nominal Output Voltage	800 V, 3W + PE
Rated AC Grid Frequency	50 Hz / 60 Hz
Nominal Output Current	216.6 A
Max. Output Current	238.2 A
Adjustable Power Factor Range	0.8 LG ... 0.8 LD
Total Harmonic Distortion	THDi < 1% (Rated)
Protection	
Smart String-level Disconnection (SSLD)	Yes
Smart Connector-level Detection (SCLD)	Yes
AC Overcurrent Protection	Yes
DC Reverse-polarity Protection	Yes
PV-array String Fault Detection	Yes
DC Surge Arrester	Type II
AC Surge Arrester	Type II
DC Insulation Resistance Detection	Yes
Residual Current Detection Unit	Yes
Communication	
Display	LED Indicators, WLAN + APP
USB	Yes
MBUS	Yes
RS485	Yes
Efficiency	
Max. Efficiency	≥ 99.03%
European Efficiency	≥ 98.8%
General	
Dimensions (W x H x D)	1.048 x 732 x 395 mm
Weight (with mounting plate)	≤ 112 kg
Operating Temperature Range	-25°C ~ 60°C
Cooling Method	Smart Air Cooling
Max. Operating Altitude without Derating	4,000 m
Relative Humidity	0 ~ 100% (Non-condensing)
DC Connector	HH4SMM4TMSPA / HH4SFM4TMSPA
AC Connector	Support OT / DT Terminal (Max. 400 mm²)
Protection Degree	IP 66
Anti-corrosion Protection	C5-Medium
Topology	Transformerless
Standards Compliance	
Environmental	IEC 62109-1/-2, IEC 62920, IEC 60947-2, EN 50549-2, IEC 61683, etc.

Remarks:
- **Features not specifically listed in the present data sheet are not included in the product**

FIMER

For more information please contact your local MA Solar Italy srl. representative or visit:

fimer.com

We reserve the right to make technical changes or modify the contents of this document without prior notice. With regard to purchase orders, the agreed particulars shall prevail. MA Solar Italy srl does not accept any responsibility whatsoever for potential errors or possible lack of information in this document.

We reserve all rights in this document and in the subject matter and illustrations contained therein. Any reproduction, disclosure to third parties or utilization of its contents – in whole or in parts – is forbidden without prior written consent of MA Solar Italy srl. Copyright© 2026 MA Solar Italy srl. All rights reserved.

FIMER_PVS-330-TL_EN_Rev_B 02.10.2026