FIMER



Solar inverter PVS-20/30/33-TL

The PVS-20/30/33-TL is the new FIMER three-phase string inverter solution, ideal for the optimization of installation and operational costs in commercial and industrial PV plants.

From 20 to 33 kW

This new PVS string inverter family, with power ratings of up to 33 kW, has been designed with the objective to maximize the ROI in commercial and industrial applications such as rooftop plants, carports and trackers.

Ease of installation and maintenance
The compact design of the product allows savings on installation costs. The installation is quick and easy, without the need to open the front cover. Moreover, being fuse-free, this inverter guarantees further savings on maintenance costs and time, reducing on site interventions to a minimum.

Maximum flexibility and integration
The input voltage range and all DC-side specs as a whole allow for the greatest plant design flexibility within both new and existing installations.
This new inverter family guarantees maximum integration with the latest PV technologies, including bifacial modules.

Advanced communication
Fast commissioning thanks to the Solar Inverters installer app which enables a quick multi-inverter installation, saving up to 70% of commissioning time.
The single string current monitoring allows to keep the status of the PV generator under control and to detect potential faults in real time.
The built-in FIMER Export Limitation solution allows to comply with any power export constraints established by utilities, without any additional device to be installed.

Integrated PID recovery function
Inverters equipped with PID (Potential Induced Degradation) recovery function are able to restore the optimal conditions of the PV module in order to prevent performance losses which could be caused by the PID during standard operation. Such functionality allows to maintain the highest level of performance and to maximize the working life of the plant, hence, optimizing the return on investment.

Integrated Arc Fault Circuit Interrupter
The Integrated Arc Fault Circuit Interrupter allows to recognize and immediately interrupt the electric arcs which may occur on the PV system. Thanks to such functionality the inverter is able to offer a reliable fire prevention mechanism wherever required for roof mounted installations.

RSD compatibility
PVS-10/33 is tested for operation in PV systems equipped with Rapid Shutdown systems (RSD) and/or with I-V optimizers installed at module level (contact MA Solar Italy for a complete list of compatible systems).

Highlights
- Communication active during the night
- High DC/AC power oversizing capability
- Compact inverter suitable for vertical and horizontal installation
- Fuse-free design
- Installation on new and existing plants
- Maximum string voltage 1100 Vdc
- High-current PV module support
- Integrated Export Limitation function
- Single string current monitoring
- Energy community ready

Block diagram PVS-20-TL (2MPPT)

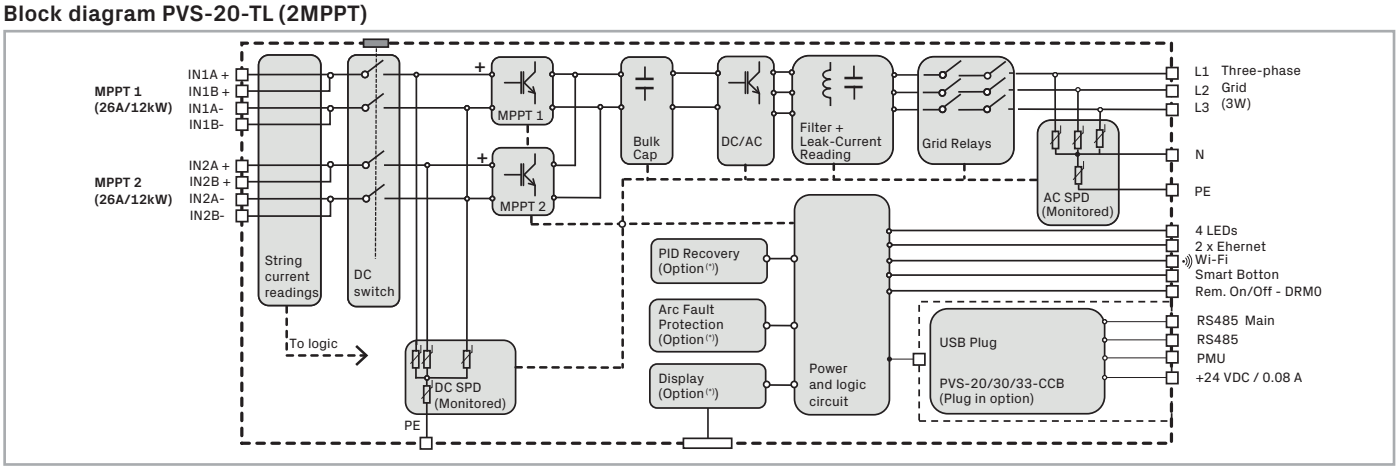

Block diagram PVS-20-TL (4MPPT) and PVS-30/33-TL

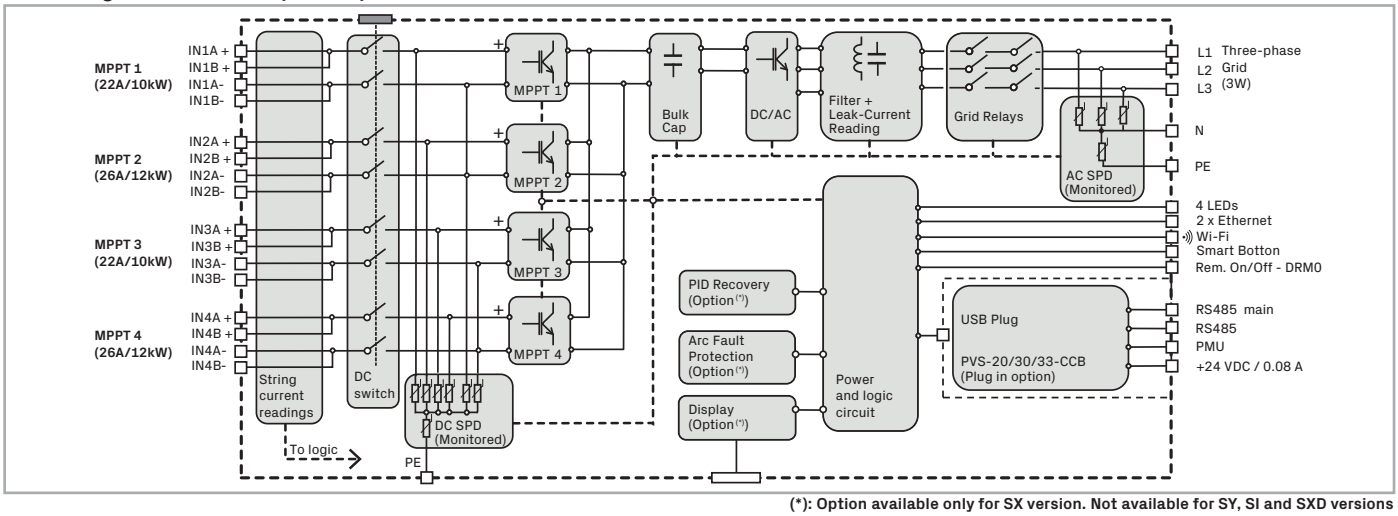

(*): Option available only for SX version. Not available for SY, SI and SXD versions

Technical data and types

Type code	PVS-20-TL (2MPPT)	PVS-20-TL (4MPPT)	PVS-30-TL	PVS-33-TL
Input side				
Absolute maximum DC input voltage ($V_{max,abs}$)	1100V			
Start-up DC input voltage (V_{start})	250...500V (default 430V)			
Operating DC input voltage range (V_{dcmin}...V_{dcmax})	200-1000 V			
Rated DC input voltage (V_{dcr})	620V			
Rated DC input power (P_{dcr})	20500 W	20500 W	30600 W	33700 W
Maximum photovoltaic power recommended ($P_{PV,\ max}$)	30000 Wp	34000 Wp	44000 Wp	48000 Wp
Number of independent MPPT	2	4	4	4
Maximum DC input current (I_{dcmax}) for each MPPT	2x26A	2x26A + 2x22A	2x26A + 2x22A	2x26A + 2x22A
Maximum DC input power for each MPPT ($P_{MPPT,max}$)	2x12000W	2x12000W + 2x10000W	2x12000W + 2x10000W	2x12000W + 2x10000W
MPPT input DC voltage range ($V_{MPPTmin}$ ... $V_{MPPTmax}$) at P_{acr}	460-850V			
Maximum input short circuit current for each MPPT	40A [1]			
Maximum backfeed current (AC side vs DC side)	Negligible in normal operating conditions [2]			
Number of DC inputs pairs for each MPPT	2			
DC connection type	PV quick fit connector			
Input protection				
Reverse polarity protection	Yes			
Input over voltage protection for each MPPT	SPD Type II / Type I+II (optional)			
Isolation control	Yes, according local regulation			
Output side				
AC grid connection type	Three-phase (3W+PE or 3W+N+PE)			
Earthing system	TN-S, TN-C, TN-CS, TT	TN-S, TN-C, TN-CS, TT	TN-S, TN-C, TN-CS, TT	TN-S, TN-C, TN-CS, TT, IT [3]
Rated AC power (P_{acr} @cosφ=1)	20000 W	20000 W	30000 W	33000 W
Maximum AC output power (P_{acmax} @ cosφ=1)	22000 W up to 30°C [4]	22000 W up to 30°C [4]	33000 W up to 30°C [6]	36300 W up to 30°C [4]
Rated apparent power (S_r)	22000 [8] / 20000 VA	22000 [8] / 20000 VA	33000 [8] [9] / 30000 VA	36300 [8] / 33000 VA
Maximum apparent power (S_{max})	22000 VA up to 30°C [5]	22000 VA up to 30°C [5]	33000 VA up to 30°C [7]	36300 VA up to 30°C [5]
Maximum reactive power (Q_{max})	20000 VAR	20000 VAR	30000 VAR	33000 VAR
Nominal power factor and adjustable range	> 0.995; 0...1 inductive/capacitive			
Rated AC grid voltage ($V_{ac,r}$)	380V, 400V			
Rated AC output current ($I_{ac,r}$)	31.9 A	31.9 A	47.8 A [10]	52.6 A
Maximum AC output current ($I_{ac,max}$)	33.4 A	33.4 A	50.1 A	55.1 A
Rated output frequency (f_r)	50 Hz / 60 Hz			
Output frequency range (f_{min}...f_{max})	47...53 Hz / 57...63 Hz			
Total current harmonic distortion	<3%			
Maximum AC cable	35 mm^2 cupper/aluminum			
AC connection type	Detachable Terminal Block			
Output protection				
Anti-islanding protection	According to local standard			
Maximum external AC overcurrent protection	63 A	63 A	80 A	80 A
Output overvoltage protection	SPD Type II			
Operating performance				
Maximum efficiency (μmax)	98,4%	98,4%	98,4%	98,4%
Euro efficiency	98,2%	98,2%	98,2%	98,2%
Communication				
Embedded communication interfaces	Dual Ethernet port, WLAN, advanced RS-485 port (optional)			
Communication protocol	Modbus TCP Sunspec, Modbus RTU Sunspec (optional)			
User Interface	LEDs, Web User Interface, Installer APP, Display (optional)			
Cloud services	Aurora Vision® Plant Management Platform, Rest API			

Technical data and types

Type code	PVS-20-TL (2MPPT)	PVS-20-TL (4MPPT)	PVS-30-TL	PVS-33-TL
Input side				
Advanced functions	Embedded export limitation control (in combination with external meter), 24h self consuption monitoring			
Environmental				
Ambient temperature range	-25...+60°C (-13...140 °F) with derating above 45 °C (113 °F)			
Relative humidity	4%... 100% condensing			
Maximum operating altitude	4000 m	4000 m	4000 m	4000 m (13123 ft) with derating above 3000 m (9842 ft)
Physical/General				
Inverter typology	Grid connected, double stage, transformerless			
Environmental protection rating	IP65			
Environmental classification	4K26 (IEC 60721-3-4)			
Cooling	Forced air			
Dimension (H x W x D)	675 (799,2 with connection boxes) x 591,8 x 227,5 mm			
Weight	50 Kg			
Mounting system	Single mounting bracket (vertical or horizontal installation)			
Safety				
Marking	CE, RCM			
Safety, EMC and RED standard	IEC/EN 62109-1, IEC/EN 62109-2, EN 61000-6-1, EN 61000-6-2, EN 61000-3-11, EN 61000-3-12, EN 62311, EN 301 489-1, EN 301 489-17, EN 300 328			
Grid standard (check your sales channel for availability)	IEC 61683, EN 50530, IEC 62116, IEC 61727, AS/NZS 4777.2, VDE-AR-N 4105, VDE-AR-N 4110, VDE V 0124-100, DIN VDE V 0126-1-1, VFR 2019, UTE C15-712-1, CEI 0-21, CEI 0-16, PEA, MEA, EN 50438, EN 50549-1/-2, DRRG (DUBAI), CLC/TS 50549-1/-2, G99, Synergrid C10/11, RD 413, RD 1565, RD244, P.O. 12.3, NTS 631, UNE 206006 IN (ITC-BT-40), PPDS-priloha, Denmark Type A/B, IRR-DCC-MV, ABNT NBR 16149, ABNT NBR 16150, NRS 097-2-1, SII, ISO/IEC Guide 67, Netherlands Type A, EIFS Type A, Ireland			
Available product versions				
Inverter equipped with SPD Type 2 on the DC and AC side	PVS-20-TL-SX	PVS-20-TL-SXD	PVS-30-TL-SX	PVS-33-TL-SX
Inverter equipped with SPD Type 1+2 on the DC side and Type 2 on the AC side	PVS-20-TL-SY	-	PVS-30-TL-SY	PVS-33-TL-SY
Inverter equipped with SPD Type 2 on the DC and AC side for IT system	-	-	-	PVS-33-TL-SI
Available ordering options				
PID recovery	Only for SX version	-	Only for SX version	Only for SX version
AFCI (Arc Fault Circuit Interrupter)	Only for SX version	-	Only for SX version	Only for SX version
Display	Only for SX version	-	Only for SX version	Only for SX version
Additional plug-in option				
PVS-20/30/33-CCB	Available	Available	Available	Available

1) 30 A for Australia and New Zealand
2) In the event of a fault, limited by the external protection envisaged on the AC circuit
3) Available only with a dedicated version called "SI", with 33 kW of power
4) Selecting the grid code "GERMANY (VDE 4105:2018 PNOM)" this value is limited to 20000W for PVS-20-TL and 33000W for PVS-33-TL
5) Selecting the grid code "GERMANY (VDE 4105:2018 PNOM)" this value is limited to 20000VA for PVS-20-TL and 33000VA for PVS-33-TL
6) Selecting the grid code "GERMANY (VDE 4105:2018 PNOM)" or "AUSTRALIA (AS/NZS 4777)" this value is limited to 30000W
7) Selecting the grid code "GERMANY (VDE 4105:2018 PNOM)" or "AUSTRALIA (AS/NZS 4777)" this value is limited to 30000VA
8) Up to 30°C amb.
9) 30000 for "AUSTRALIA (AS/NZS 4777 PNOM)"
10) Selecting the grid code "GERMANY" (VDE 4105:2018 PNOM)" or "AUTRALIA (AS/NZS 4777 PNOM)" this value is limited to 43.5A

Remarks:

- **Designed and manufactured in Italy**
- **Features not specifically listed in the present data sheet are not included in the product**

FIMER

For more information please contact your local MA Solar Italy representative or visit:

fimer.com

We reserve the right to make technical changes or modify the contents of this document without prior notice. With regard to purchase orders, the agreed particulars shall prevail. MA Solar Italy does not accept any responsibility whatsoever for potential errors or possible lack of information in this document.

We reserve all rights in this document and in the subject matter and illustrations contained therein. Any reproduction, disclosure to third parties or utilization of its contents – in whole or in parts – is forbidden without prior written consent of MA Solar Italy. Copyright© 2025 MA Solar Italy. All rights reserved.

FIMER_PVS-20-30-33-TL__EN_Rev_L 03.12.2025