V01

INSTALLATION MANUAL OF ENERGY STORAGE SYSTEM STORION-G2-H30/H50-O



Copyright Statement

This manual is copyrighted by Alpha ESS Co., Ltd., and all rights are reserved. Without the written permission of our company, no organization or individual may extract or copy part or all of the content of this document without authorization, and may not disseminate it in any form. Unauthorized modification or disassembly of the system is strictly prohibited.

Please keep this manual safe and strictly follow all safety and operating instructions in this manual. Do not install or operate the system before reading this manual.

Notice

The products, services, or features you purchase are subject to the AlphaESS commercial contract and terms, and some of the products, services, or features described in this document may not be within the scope of your purchase or use. Unless otherwise agreed in the contract, AlphaESS makes no express or implied warranties regarding the content of this document.

Due to product version upgrades or other factors, the content of this document may be updated from time to time. This document is for guidance only and does not constitute any form of commitment. Please refer to the actual product for accuracy.

Preface

The STORION-G2-H30/H50-O energy storage system has been developed by AlphaESS over many years and has been successfully applied in many fields. It is a high-tech product with excellent quality and stable performance that meets today's power supply needs.

This manual is intended to address product installation and usage issues. It provides detailed installation and usage information, including safety instructions, product introduction, installation, and user guidelines.

Symbols

The following symbols may appear in this document. Please note that they represent the following meanings:

Symbol	Description
	Indicates potential risks that may cause system malfunctions or errors if not avoided.
	Indicates moderate potential hazards that may lead to system damage or personal injury if not avoided.
	Indicates high potential hazards that may result in death or serious injury if not avoided.
	Supplementary explanation of key information in the main text. "Explanation" is not a safety warning information and does not involve personal, system, or environmental injury.

Terminology

1. Battery Management System (BMS)

Monitors the operational information of battery cells, battery packs, and system units (such as voltage, current, temperature, and battery protection parameters), and intelligently assesses the state of charge (SOC), state of health (SOH), and total energy output to ensure battery safety.

2. Energy Management System (EMS)

Consists of data collection and monitoring systems and supports automatic power generation control, economic dispatch control, and power system status and safety analysis.

3. Battery Energy Storage System (BESS)

A combination of series- and parallel-connected batteries and the BMS, used to connect the DC side of G2-H30/H50-INV.

4. Energy Storage System (ESS)

A combination of a battery system and power conversion systems (PCSs) such as STORION-G2-H30/H50-O. An ESS can be used as an independent power source or be directly controlled by a monitoring system.

5. Photovoltaic (PV)

A PV power system is a new type of power generation system that utilizes the photovoltaic effect of semiconductor materials in solar cells to directly convert solar radiation energy into electrical energy.

6. On-Grid System

On-grid systems typically consist of PV strings, PCSs such as G2-H30/H50 inverters, battery systems, and the power grid. When the electricity generated by the PV strings is sufficient, the excessive electricity can be fed into the grid. When the electricity generated by the PV strings and battery system is insufficient, the grid can supply power to the load.

7. Off-Grid System

Off-grid systems are suitable for areas without a grid or where the grid power is unstable. These systems typically consist of PV strings, energy storage inverters, battery systems, and generators. When the battery has sufficient energy, the load is powered by the PV system and the battery. If the battery energy is insufficient, the generator powers the load while charging the battery system.

Version Information

Version	Date	Content
V01	2024.10.17	New

Contents

Copyright Statement 2

Notice 5

Preface 5

Symbols 5

Terminology 9

Version Information 8

1. Introduction 11

1.1 System Introduction 11

1.2 Safety Instructions 12

1.2.1 Usage Introduction 12

1.2.2 Requirements for Operators 13

1.2.3 Personal Safety 13

1.3 Product Safety 14

1.4 Electrical Safety 15

1.4.1 Grounding Requirements 15

1.4.2 Wiring Requirements 15

1.5 Transportation Requirements 16

2. Product Introduction 17

2.1 Product Features 17

2.2 Product Components 17

2.2.1 Appearance 17
2.2.2 Indicator Lights 19
2.2.3 Outdoor Cabinet Size Parameters 20
2.2.4 Outdoor Cabinet Interior Design (Using M38210-SC as an Example) 21
2.2.5 Equipment Operation Switch Locations 23
2.2.6 Cable Entry Design 24
2.2.7 Air Conditioning Outlet 24

3. Product Component Description 26

3.1 M38210-SC 26

3.2 M7790-S 27

3.3 HV-Box 29

3.4 EMS 4.2, SCADA, and Ports 31

3.5 G2-H30/H50-INV 35

4. Installation 39

4.1 Installation Location and Environment 39

4.1.1 General Requirements 39
4.1.2 Restrictions 40
4.1.3 STORION-G2-H30/H50-O Installation Locations 40

4.2 STORION-G2-H30/H50-O Outdoor Cabinet Body Fixing 42

4.2.1 Parts List 42
4.2.2 STORION-G2-H30/H50-O Outdoor Cabinet Installation 45
4.2.2.1 Transportation Conditions 45
4.2.2.2 Forklift Transportation 46
4.2.2.3 STORION-G2-H30/H50-O Equipment Installation 47
4.2.3 PCS Wall-Mounted Device Installation 49

4.3 Battery Installation 51

4.4 Electrical Connections 57

Contents

4.4.1 Safety Precautions 57
4.4.2 Communication Connection Between System Cabinet and PCS 57
4.4.3 Battery Power Cable Connection 58
4.4.4 Communication Connection between Expansion Cabinet and System Cabinet (Optional) 58
4.4.5 Expansion Cabinet Battery Power Line Connection (Optional) 59
4.4.6 AC Load Cabling 60
4.4.7 AC Power Grid Cabling and Electricity Meter 61
4.4.7.1 AC Power Grid Cabling 61
4.4.7.2 Electrical Meter Cabling 62
4.4.7.3 Schematic Diagram of Positive Direction of Electricity Meter Wiring 63
4.4.7.4 Electricity Meter Settings 64
4.4.8 Dual Power Supply Mode Connection 65
4.4.8.1 AC Side Power Cable Connection 65
4.4.8.2 Communication Line Connection 66
4.4.9 Off-Grid Diesel Dry Contact Connection 67
4.4.10 System Cabinet Auxiliary Power Supply Cabling 67
4.4.11 System Parallel Connection Cabling 68
4.4.11.1 Grid-side Connection (Load Connected to the GRID Side) 68
4.4.11.2 Communication Cable Connection 69

5. Startup and Operation 71

6. Technical Contact 72

7. Attachment 73

System Installation of a Torque Wrench 73

System Normal Voltage Range Table 74

1. Introduction

1. 1 System Introduction

STORION-G2-H30/H50-O is equipped with a 30kW/50kW PCS, paired with M7790-S or M38210-SC batteries, and can be optionally configured with an ATS cabinet for a dual power supply switching system. The total capacity range of STORION-G2-H30/H50-O is from 34.56kWh to 104.83kWh.

The DC side has a PV input, and the system is equipped with an on/off-grid switching device. The AC side is connected to both the power grid and the user loads. The schematic diagram is as follows:

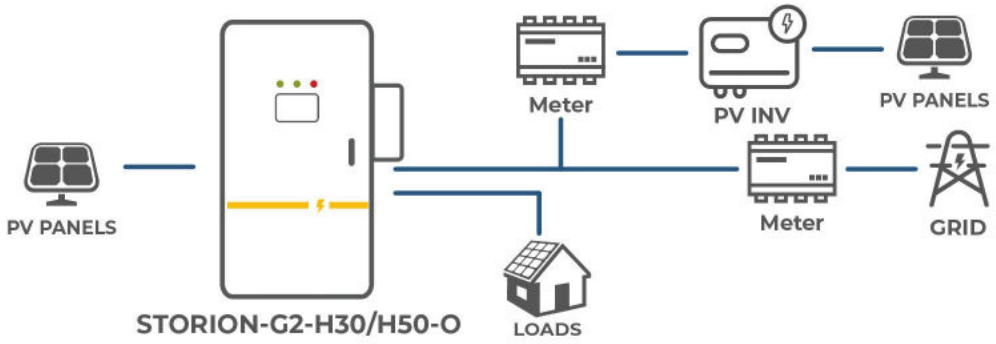

In the dual power switching mode, the load side is connected to the user loads. With the dual power switching cabinet, the system can switch between the diesel generator and the power grid. The schematic diagram is as follows:

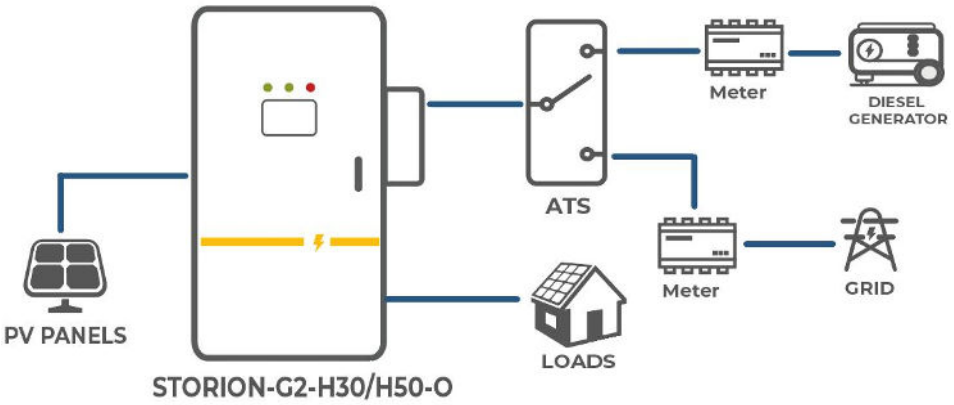

The schematic diagram of parallel operation is as follows:

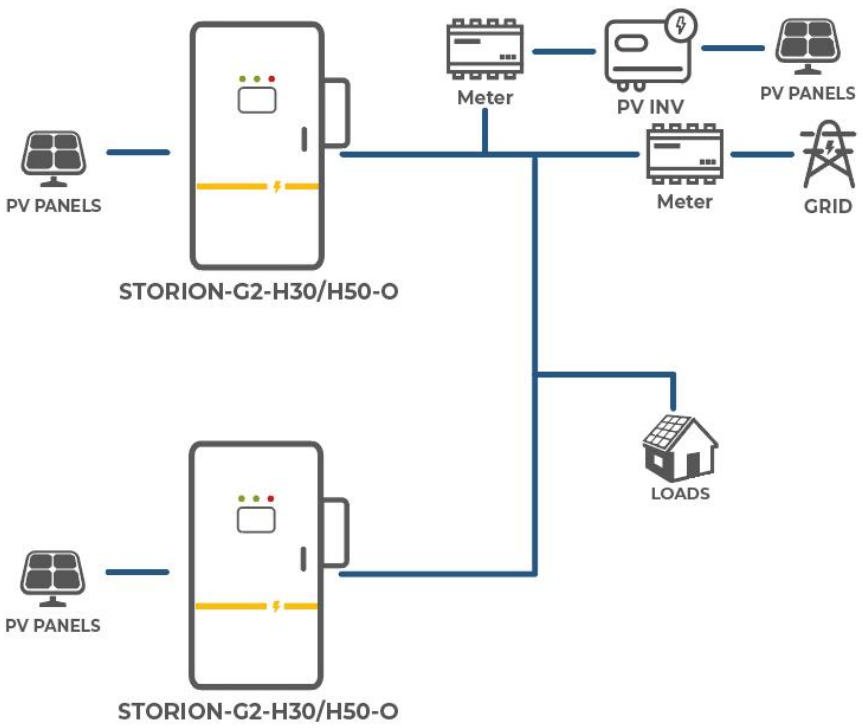

1.2 Safety Instructions

1.2.1 Usage Introduction

This manual contains important information about product installation. Please read it carefully before operation.

Please keep this manual safe for reference during product installation, operation, and maintenance.

To avoid product damage, personal injury, and property damage, strictly follow the instructions in this manual for product installation, operation, and maintenance.

Before installation personnel leave the site, be sure to shut down any system (including the batteries and PCSs) that has not yet completed commissioning.

When a system malfunctions during normal operation, please refer to the troubleshooting table to diagnose the problem. If the problem persists, contact an AlphaESS engineer in a timely manner. Before the AlphaESS engineer responds, be sure to shut down the system (including the batteries and PCSs).

To ensure optimal reliability and comply with warranty requirements, the energy storage system must be installed, operated, and maintained in accordance with the

instructions in this manual. AlphaESS does not assume any responsibility for violating general safety operation requirements or product safety standards for design, production, and use. Any consequential damage caused to the product will not be covered by the warranty.

1.2.2 Requirements for Operators

1.Operators must have a professional qualification certificate issued or authorized by AlphaESS.

2.Operators must be familiar with the product, including its components and working principles.

3.Operators must be familiar with the product manual and strictly follow the instructions for installation, operation, and maintenance.

4.When performing any product-related work, at least two operators must be present. Do not perform maintenance work before the product is powered off.

1.2.3 Personal Safety

1. Set up clear signs on circuit breakers such as PVs, batteries, PCSs, and distribution boxes to prevent accidents caused by accidental closing.
2. Set up warning signs or safety tapes near the operating area.
3. When conducting electrical connections, trial runs, or product maintenance on the system, use a multimeter to measure the electrical parameters of the product to ensure that they meet the requirements. Use the multimeter correctly to ensure personnel safety.
4. The system contains high voltage, and accidental contact may result in a fatal electric shock. Therefore, protective measures must be taken during live testing.
5. Ensure that the connection and usage of the system comply with relevant regulations to prevent arcing or electric shock accidents.

CAUTION

During installation, operation, and maintenance, the following installation tools and protective equipment are required.

The installation tools are listed in the following table.

Number	Name	Model specifications	Unit	Quantity
1	Diagonal pliers	/	Pcs	1
2	Screwdriver	2/4/6/8mm	Pcs	1
3	Cable tie	/	Pcs	1
4	Multimeter	DC 1000V	Pcs	1
5	Impact drill	/	Pcs	1
6	Socket wrench	Socket wrench set	Pcs	1
7	Open end wrench	Open end wrench set	Pcs	1
8	Socket torque wrench	/	Pcs	1
9	PV cable connector tool	/	Pcs	1

The protective equipment is listed in the following table.

Number	Name	Number	Name
1	Safety shoes	4	Protective goggles
2	Safety helmet	5	Dust mask
3	Safety gloves		

1.3 Product Safety

1.Warning signs contain important information for the safe operation of the product. Ensure that the warning signs are clear and visible and prevent any deliberate damage. If any sign is damaged, it should be replaced immediately.

2.The key must be removed from the system after formal operation or maintenance is completed.

3.Avoid unnecessary contact with the circuit board to prevent damage to it or other static-sensitive components caused by contact or improper operation.

DANGER

During maintenance, all products must be powered off and maintained strictly in accordance with the relevant requirements of this manual.

1.4 Electrical Safety

1.4.1 Grounding Requirements

1.When you install the product, install the protective ground wire first. When you disassemble it, remove the protective ground wire in the last step.

2.The system should be permanently grounded. Before you operate on the system, you must check the electrical connections of the system to ensure that it is reliably grounded.

3.Do not damage the grounding conductor.

CAUTION

It is strictly prohibited to install the system before grounding.

1.4.2 Wiring Requirements

1. Cables used in high-temperature environments may be subject to insulation layer aging and damage. Ensure that the distance between the cable and any surrounding heating devices or heat source areas is at least 30 mm.

2. Similar cables should be bundled together, while different types of cables must be laid at least 30 mm apart. Wrapping or crossing cables is prohibited.

3. All cables used in the product must be securely connected, properly insulated, and meet the applicable specifications.

4. When a communication line must cross a power line, maintain a 90° angle between the two types of cables.

CAUTION

The system's operating temperature range is -10°C to 50°C.

1.5 Transportation Requirements

When moving large products without dismantling the transportation packaging boxes, use a forklift to lift items such as the PCS or battery rack from the bottom, as shown in the following schematic diagram:

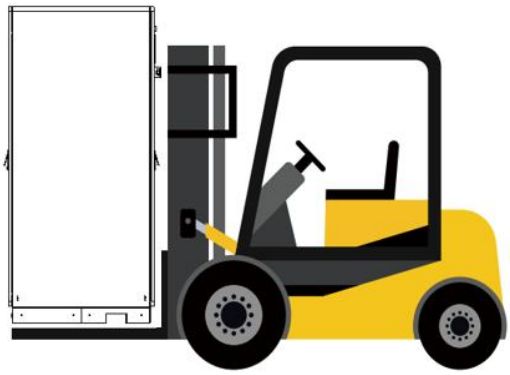

When handling batteries, to prevent dropping due to their weight, it is recommended that two to four people carry them. It is prohibited to handle at positions A and B. In addition, avoid contact with liquids during transportation. The schematic diagram is shown below:

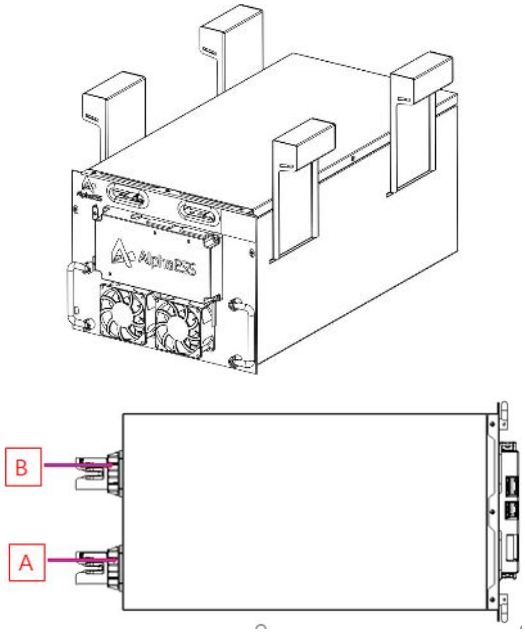

2. Product Introduction

2.1 Product Features

The lithium iron phosphate battery produced by AlphaESS features long life and high reliability, meeting the application demands of various energy storage systems.

The system is designed with a high degree of modularity, making it easy to assemble, transport, and maintain.

It utilizes real-time balancing technology to ensure high consistency among battery modules.

The system's detachable, compact, and flexible design facilitates installation and testing while accommodating different working environments and requirements.

It is equipped with advanced thermal management technology, allowing it to operate in optimal temperature conditions.

It supports both local and remote monitoring and control.

The system implements flexible power system scheduling through communication between the BMS, G2-H30/H50-INV, EMS, and monitoring systems.

2.2 Product Components

2.2.1 Appearance

The appearance of the STORION-G2-H30/H50-O energy storage system is shown in the following figure:



NOTE

***The above image is for reference only. For more information, refer to the actual product received.**

The product appearance is described in the following table:

View	Description

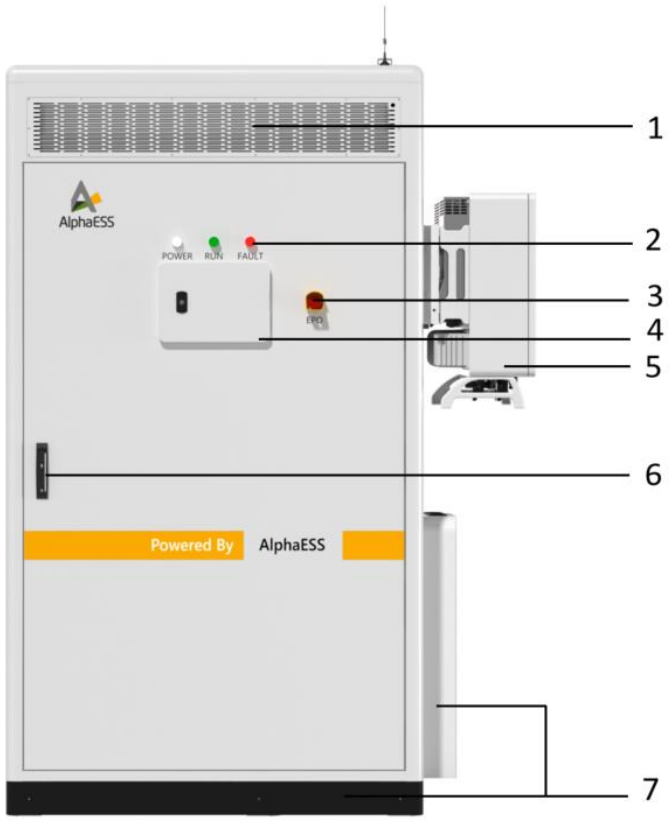

Front view

1. Air conditioner
2. Indicator lights
3. EPO
4. SCADA screen
5. PCS
6. Door lock
7. Bottom protective plate

NOTE

*The above image is for reference only. For more information, refer to the actual product received.

2.2.2 Indicator Lights

There are three indicator lights installed on the SCADA screen to display the main operating status of the system: the power indicator light "POWER", the running indicator light "RUN", and the fault indicator light "FAULT".

The indicator lights are described in the following table.

Name	Color	Description
POWER	White	Always on when the system is powered on, and always off when the system is powered off.
RUN	Green	Always on when the system is running normally with power output; flashes slowly when the system is running off-grid; and

		always off when the system is in standby mode or powered off.
FAULT	Red	Always on when a fault occurs during system operation, and always off during normal operation.

The status and descriptions of the LED indicator lights are listed in the following table.

Name	Description
POWER on, RUN on, FAULT off	The system is running normally.
POWER on, RUN on, FAULT constantly on	The constant illumination of the FAULT indicator during system operation indicates a system malfunction.
POWER on, RUN off, FAULT off	The system is in standby mode.

2.2.3 Outdoor Cabinet Size Parameters

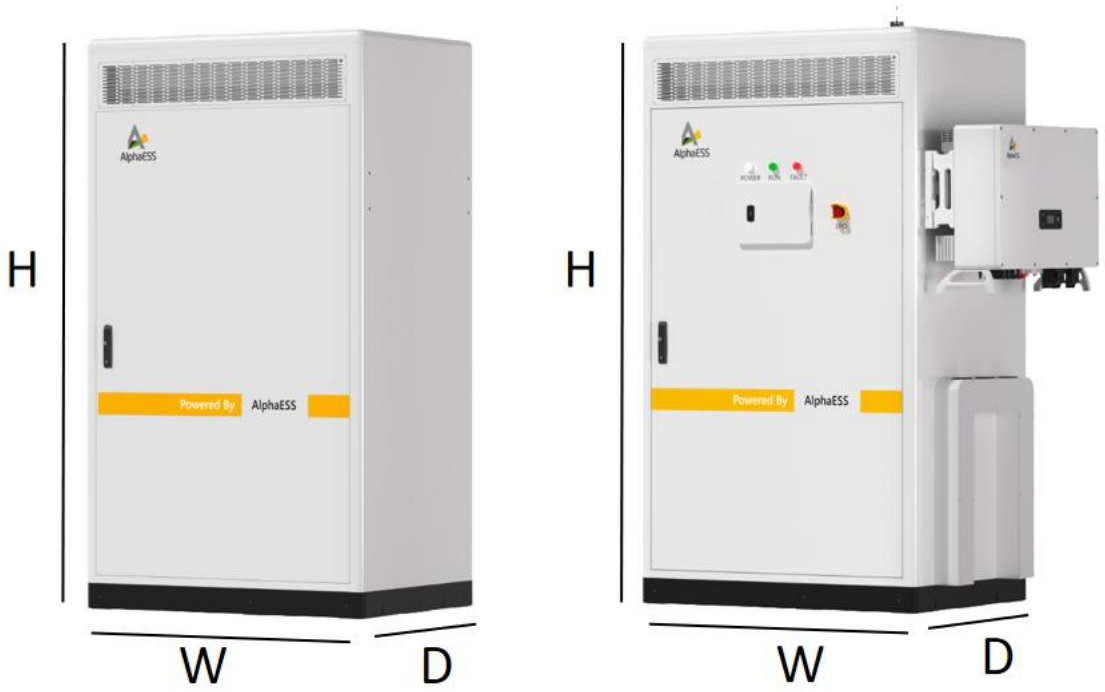

The cabinet dimensions are shown in the following table.

Machine Type	ALPBC-105-O	ALPBEC-105-O (With PCS)
W (mm)	1200	1200+300
H (mm)	2160	2160
D (mm)	900	900

2.2.4 Outdoor Cabinet Interior Design (Using M38210-SC as an Example)

The system adopts an all-in-one design that combines the PCS module with the energy storage battery system into a single unit. The PCS module is installed using an external wall-mounted solution, which will be introduced in the installation section.

View	Description

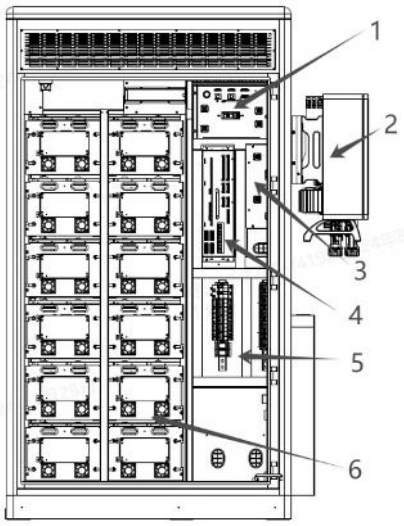	Front view 1. HV-BOX 2. PCS 3. Combiner BOX 4. EMS4.2 5. Wiring terminals and circuit breakers 6. Battery
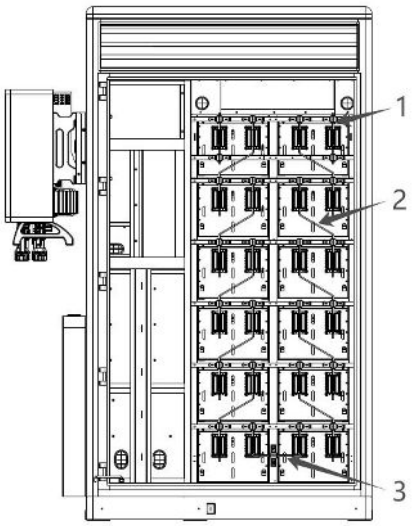	Back view 1. Main negative copper busbar 2. Series copper busbar 3. Series copper busbar (bridging)

2.2.5 Equipment Operation Switch Locations

The STORION-G2-H30/H50-O cabinet system includes relevant operation switches, high-voltage box auxiliary source switches, and high-voltage box molded-case switches. The operating positions of each switch in the system are shown in the following figure:

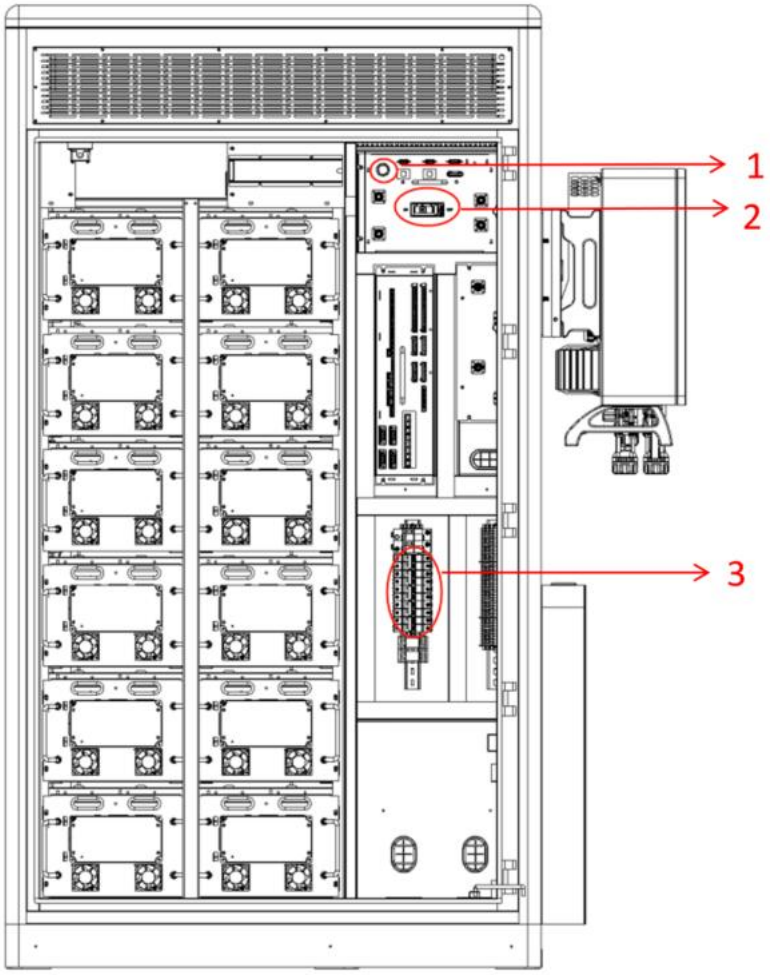

The functions of each switch in the system are described in the following table.

Number	Device Switch	Description
1	HV-BOX Auxiliary Power Switch	Controls the AC power supply to the battery for powering on the system.
2	HV-BOX Molded Case Switch	Controls the DC power supply to the battery for powering on the system.

3	System cabinet auxiliary power switch	Powers on the auxiliary source of the control system.

2.2.6 Cable Entry Design

To facilitate cable connection on site, all cables between equipment inside the system cabinet have been connected before delivery. The communication cable connecting the system cabinet and external devices can enter the interior through the cable entrance on the bottom right side of the system cabinet. The schematic diagram of the system inlet and outlet holes is shown below:

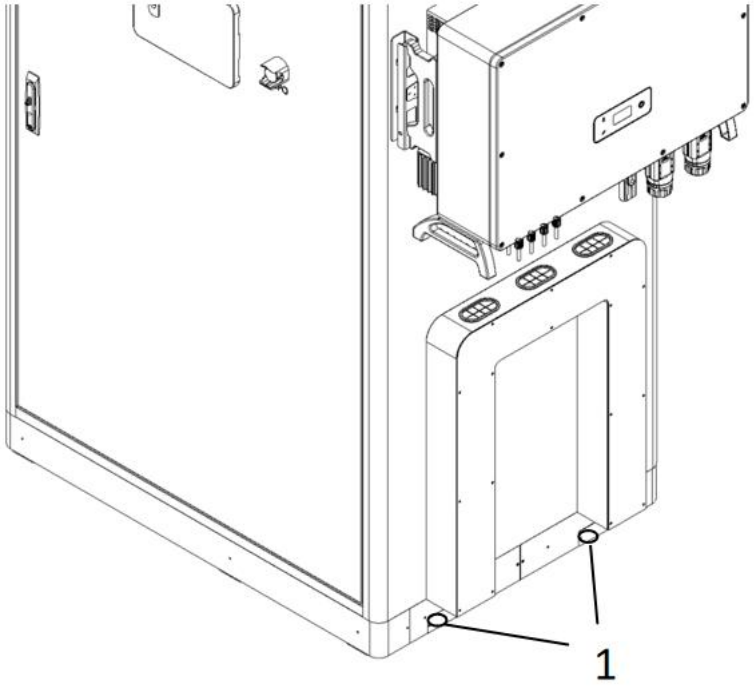

The size requirements are shown in the following table:

Number	Description	Size
1	System Communication Outlet Hole	Diameter 50 mm

2.2.7 Air Conditioning Outlet

The air conditioning outlet is located at the back of the cabinet, as shown in the following schematic diagram:

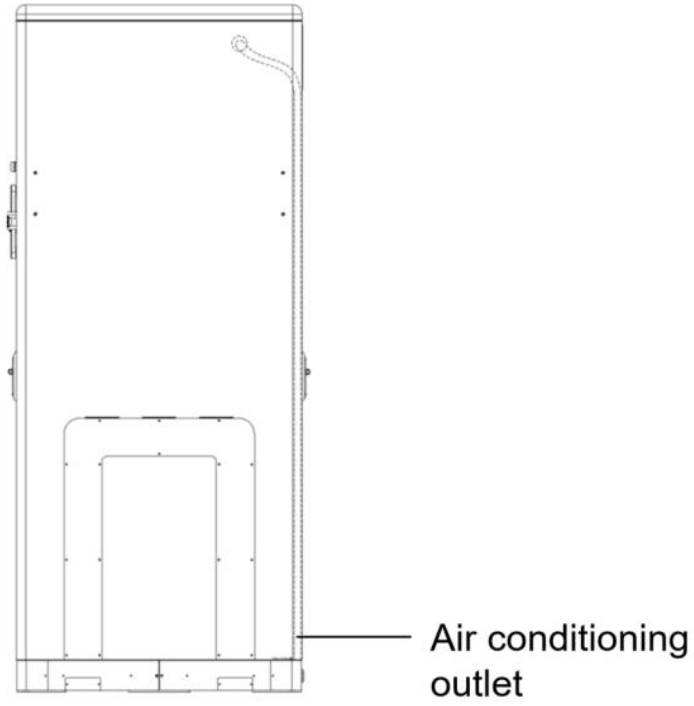
Air conditioning outlet

3. Product Component Description

3.1 M38210-SC

The battery schematic diagram is shown below:

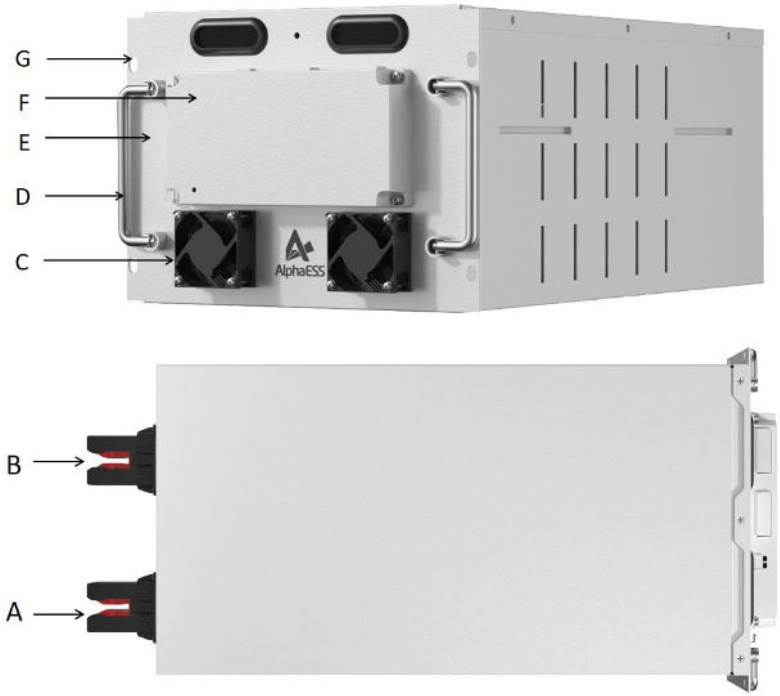

The appearance is described in the following table.

Number	Description	Number	Description
A	Battery negative terminal	E	Box body
B	Battery positive terminal	F	BLMU
C	Fan	G	Mounting hole
D	Battery handle		

The technical parameters of the battery are described in the following table.

Product Component Description

Number	Description	Technical parameter	Remarks
1	Model	M38210-SC	
2	Cell grouping method	12S2P	
3	Rated voltage	38.4V	
4	Voltage range	36-43.2V	
5	Rated capacity	210Ah	Maximum charging/discharging current 0.5C
6	Rated energy	8.1kWh	
7	Working power consumption	< 2W	
8	Sleep power consumption	< 100 mW	Battery sleep state
9	Maximum charging/discharging current	105A	Constant current mode
10	Internal resistance	< 10m Ω	Factory Default
11	Environmental temperature for transportation/storage	-20 ℃~45 ℃	
12	Working temperature range	-10 ℃~50 ℃	
13	Communication mode	CAN	
14	Weight	62 kg	
15	Permissible working environment humidity	15%~85%	

3.2 M7790-S

The appearance diagram of the M7790-S battery is shown below:

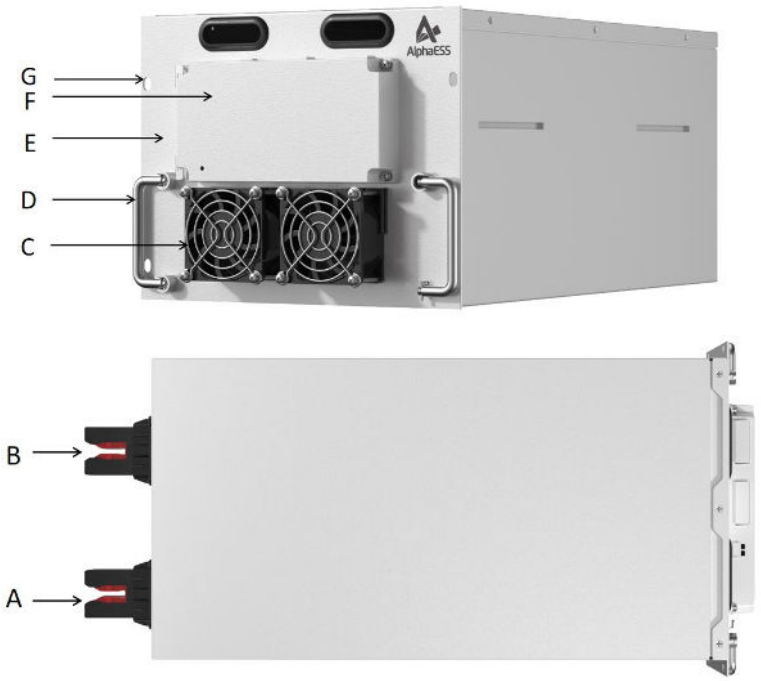

The appearance of the battery is described in the following table.

Number	Description	Number	Description
A	Battery negative terminal	E	Box body
B	Battery positive terminal	F	BLMU
C	Fan	G	Mounting hole x4
D	Battery handle		

The technical parameters of the battery are described in the following table.

Number	Description	Technical parameter	Remarks
1	Model	M7790-S	
2	Cell grouping method	24S1P	
3	Rated voltage	76.8 V	
4	Voltage range	72~84.48V	
5	Rated capacity	90 Ah	Maximum charging/discharging current 1C
6	Rated energy	6.9 kWh	
7	Working power consumption	< 2W	
8	Sleep power consumption	< 100mW	Battery sleep state
9	Maximum charging/discharging current	90	Constant current mode
10	Internal resistance	< 10 mΩ	Factory default
11	Environmental temperature for transportation/storage	-20℃~45℃	
12	Working temperature range	-10℃~50℃	
13	Communication mode	CAN	
14	Weight	65 kg	
15	Permissible working environment humidity	15%~85%	

3.3 HV-Box

The schematic diagram of the high-voltage box is shown below:

Product Component Description

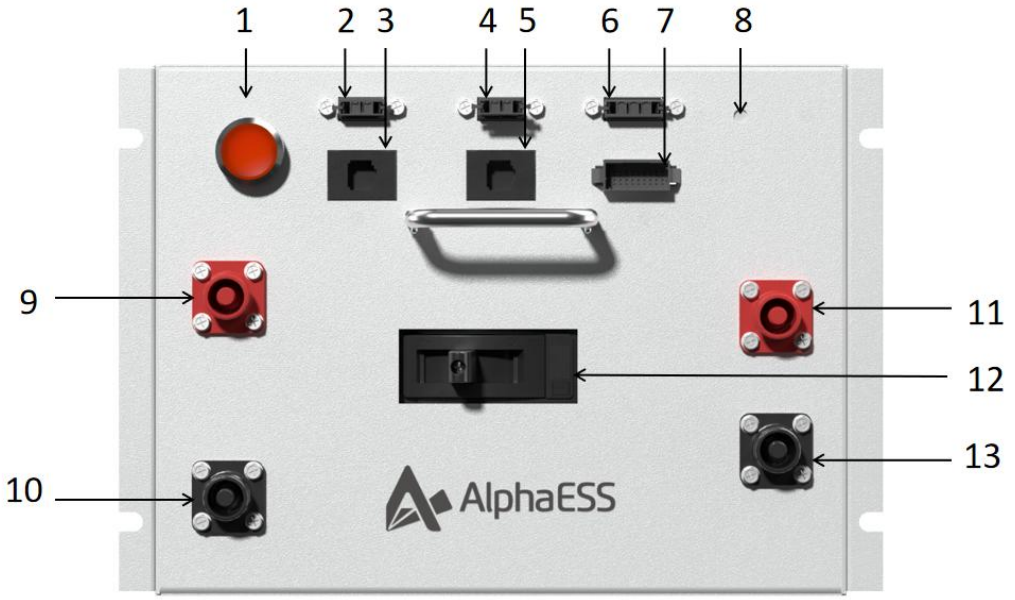

The appearance of the high-voltage box is described in the following table.

Number	Description	Number	Description
1	AC auxiliary power switch	9	Battery Positive input
2	AC auxiliary power interface	10	Battery Negative input
3	BCMU communication port (CAN)	11	HV-BOX Positive Output
4	AC auxiliary power interface	12	Molded case circuit breaker
5	BCMU communication port (CAN)	13	HV-BOX Negative Output
6	24V DC power supply		
7	BLMU to BCMU communication port		
8	Status indicator light		

The technical parameters of the high-voltage box are described in the following table:

Number	Description	Technical Parameters
1	Model	HV900105-Ⅳ

2	Working voltage range	200~900V
3	Module Connection	Support series connection of 8-12 M38210-SC batteries; Support series connection of 5-8 M7790-S batteries
4	Rated current	105 A
5	Weight	20 kg
6	Power dissipation	< 10W
7	Color	RAL7035

3.4 EMS 4.2, SCADA, and Ports

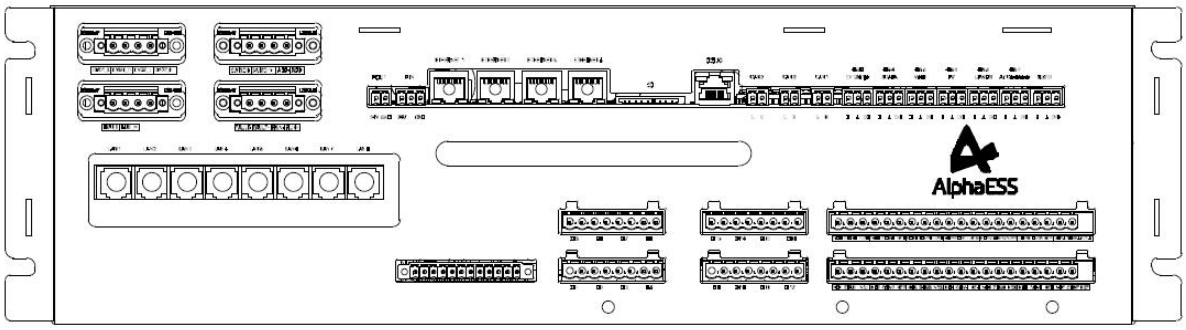

The three views of the SCADA are shown below:

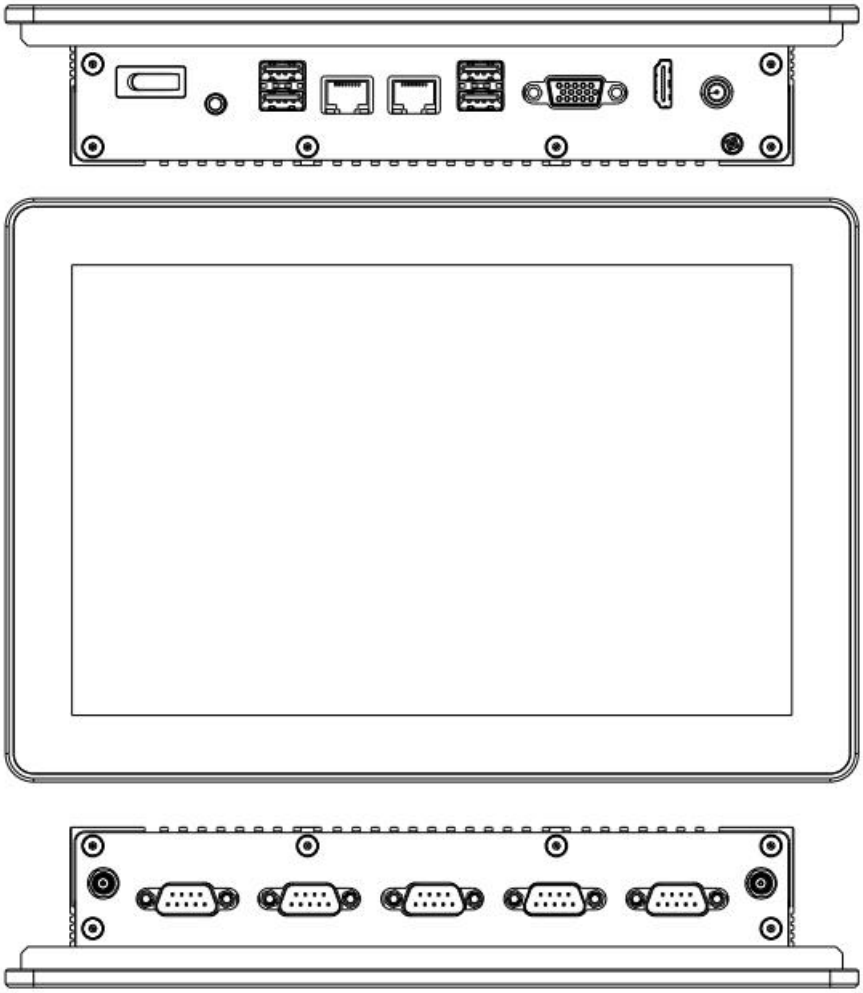

The ports are described in the following table:

Number	Port Name	Definition	Remarks
EMS4.2			
1	DI1	EPO	External normally closed
2	DI5	Fire Action	External normally open
3	DI6	Dual power supply main power signal	External normally open
4	DI7	Dual power supply backup power signal	External normally open
5	DI8	SPD signal (surge protective	External normally open

		device)	
6	DI9	Limiting the charging power of energy storage	External normally open
7	DI10	Unrestricted charging power for energy storage	External normally open
8	DI11	RRCR_K1	External normally open
9	DI12	RRCR_K2	External normally open
10	DI13	RRCR_K3	External normally open
11	DI14	RRCR_K4	External normally open
12	DI15	Temperature feedback	External normally open
13	DO2	Diesel Generator Start	Normally open
14	DO3	BMS Fault signal feedback	Normally closed
15	DO5	Remove general load	Normally open
16	DO5	Remove critical load	Normally open
17	SYS_RUN_LED	RUN LED	Active switch signal outputting 24V
18	SYS_FAULT_LED	Fault LED	Active switch signal outputting 24V
19	24V_IN	Power supply input	EMS Power supply
20	LAN1	SCADA_FS	Connected to SCADA's LAN1 via a switch. The default IP for EMS's LAN1:192.168.200.101
21	LAN2	PCS	Connected to PCS via a switch The default IP for LAN2：192.168.200.102
22	LAN3	Reserved	The default IP for LAN3：192.168.200.103

23	SD 卡	SD card	
24	CAN1	BMS	
25	RS485-2	PV INV	
26	RS485-4	HMI/SCADA_FS	Connected to SCADA_FS's COM1.
27	RS485-5	Meter	
28	RS485-7	Air conditioning	
SCADA Display screen			
29	INPUT	Power input	
30	LAN1	EMS	Connected to EMS's LAN1 via a switch.
31	COM1	EMS	Connected to EMS's RS485.

The technical parameters of EMS4.2 and SCADA display screen are described in the following table.

Number	Description	Technical Parameters
EMS4.2		
1	Size (length × Wide × High)	490.6×323×161mm
2	communication	RS-485×4, Ethernet 10 Mbps × 3
3	Working voltage	24 V
4	Power consumption	< 10 W
SCADA display screen		
5	Dimensions (length × Wide × High)	257×176×48 mm
6	Communication	4*RS-232, 2*RS-232/RS485

7	Data Storage	Single machine for 3 years, and 180 days for multiple machines.
8	Power consumption	< 19W
9	Resolution	1280×800
10	Working voltage	24V

3.5 G2-H30/H50-INV

The appearance of the energy storage inverter G2-H30/H50-INV is shown in the following figure:

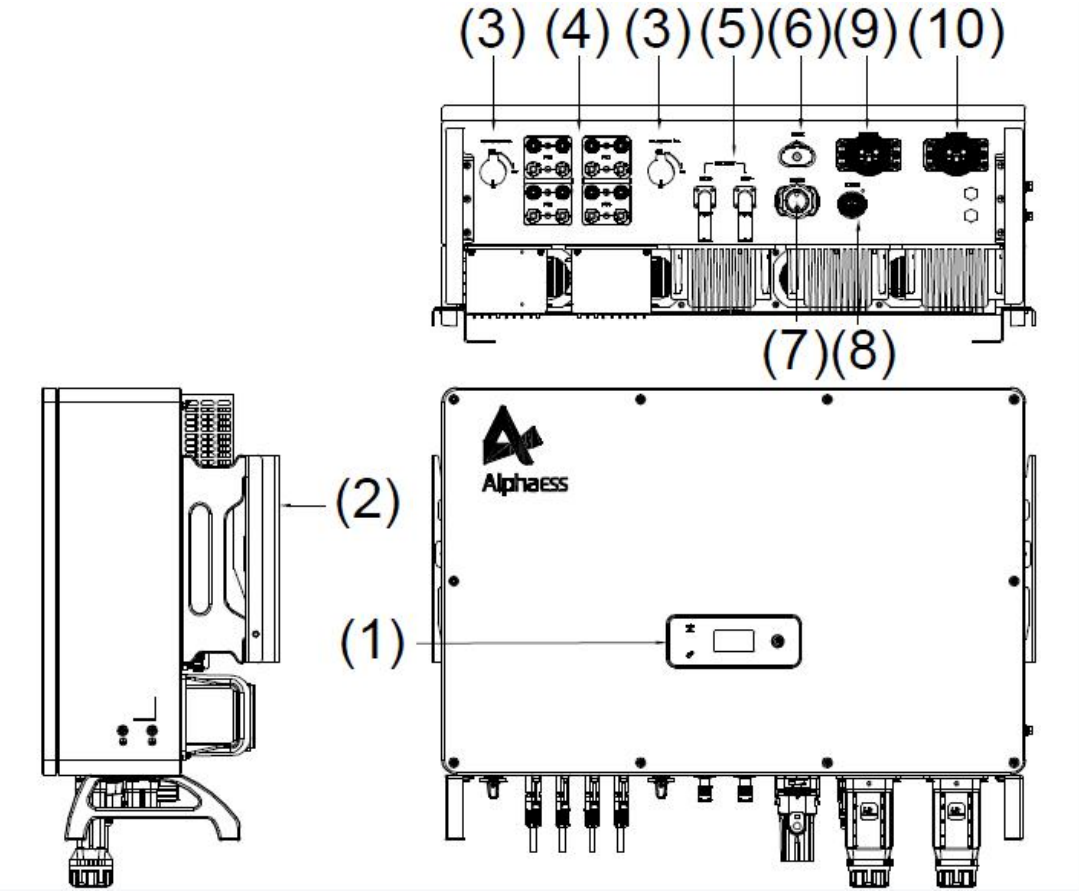

The appearance is described in the following table:

Number	Description	Remarks

1	Display panel	Displays inverter information.
2	Hanger	Used for the installation of inverters.
3	DC switch	Controls the on and off of the PV input.
4	PV input terminal	Connects to PV input
5	Battery input terminal	Connects the battery power lines
6	COM1 port	Communicates with EMS
7	COM2 port	RS485 communication of PCS
8	COM3 port	Reserved
9	On-grid output terminal	Grid-side port
10	Backup output terminal	Load-side port

The technical parameters of the inverter are described in the following table:

Number	Model	G2-H30-INV	G2-H50-INV
PV input			
1	Recommended Max. input power	45kW	75kW
2	Max. DC input voltage*	1000V	1000V
3	Rated DC input voltage	620V	620V
4	MPPT voltage range*	200-850V	200-850V
5	No. of MPP trackers	4	4
6	No. of DC inputs per MPPT	2	2
7	Max. input current	30A×4	30A×4
Battery side			
8	Battery voltage range	135-750V	

9	Maximum charging/discharge current	100 A/100A	
Grid side			
10	Rated output power	30kW	50kW
11	Max. output apparent power	33kVA	55kVA
12	Max. input apparent power*	36kVA	60kVA
13	Max. charging power of batter	30kW	50kW
14	Rated AC voltage	3L/N/PE;220/380V;230/400V;240/415V	
15	Rated AC frequency	50/60Hz	
16	Max. output current	50A	83A
Load side			
17	Rated output power	30kW	50kW
18	Max. output apparent power	33kVA	55kVA
19	Max. output current	50A	83A
20	UPS switching time	< 20ms	< 20ms
21	Rated output voltage	3L/N/PE;220/380V;230/400V;240/415V	
22	Rated output frequency	50/60Hz	
Other information			
23	Dimensions	800×620×300mm	
24	Weight	72kg	
25	Protection degree	IP65	
26	Operating altitude	3000m (derating above 3,000m)	
27	Operating temperature range	-30~60℃	

28	Relative humidity	0~100%
29	Noise level	< 50dB
30	Standby self-consumption	< 15W

4. Installation

4. 1 Installation Location and Environment

4. 1. 1 General Requirements

The environmental requirements for installation are described in the following table.

Environmental parameters				Installation environmental conditions	Environmental conditions for transportation and storage		Remarks
Project		Parameter	Unit		Storage	Transport	
Climatic conditions	Temperature	Low temperature	℃	-10	0	-20	
		High temperature	℃	+50	+35	+45	
	Voltage	Low voltage	kPa	79.5	/		
		High voltage	kPa	106	/		
	Humidity	Low relative humidity	%	0	0	0	When the temperature is below 20 ℃
		High relative humidity	%	90	80	90	
		Condensation	Yes/No	/	/		Within the relative humidity range of 0~90%, there is no condensation

							generated inside the product.
	Altitude	Low altitude	m	0	0	0	When the altitude exceeds 3000m and exceeds the maximum limit, it shall be used in accordance with the provisions of 5.11.2 in GB/T3859.2-1993.
		High altitude	m	3000	3000	3000	
Remarks	For the installation environment conditions of the system, the system performance will be affected when the temperature is below 0 ° C and above 40 ° C To the limit.						

4.1.2 Restrictions

STORION-G2-H30/H50-O cannot be installed in the following environments.

1. Regions with high humidity and salinity, such as coastal and desert areas.
2. Flood-prone areas.
3. Earthquake-prone areas (additional safety measures are required).
4. Regions with frequent changes in environmental temperature.
5. Places above an altitude of 3000 meters.
6. Places with explosive or potentially explosive environments.
7. Places with highly flammable materials or gases.
8. Places close to water sources (such as faucets, drainage pipes, sprinklers, etc.).
9. Places with fragile and uneven support surfaces.
10. Places that do not meet fire safety requirements, such as places without fire sand or dry powder fire extinguishers.

4.1.3 STORION-G2-H30/H50-O Installation Locations

When installing the indoor cabinet of STORION-G2-H30/H50, ensure there is sufficient space for ventilation and cooling as well as for installation and maintenance. The specific installation location requirements are illustrated in the following figure:

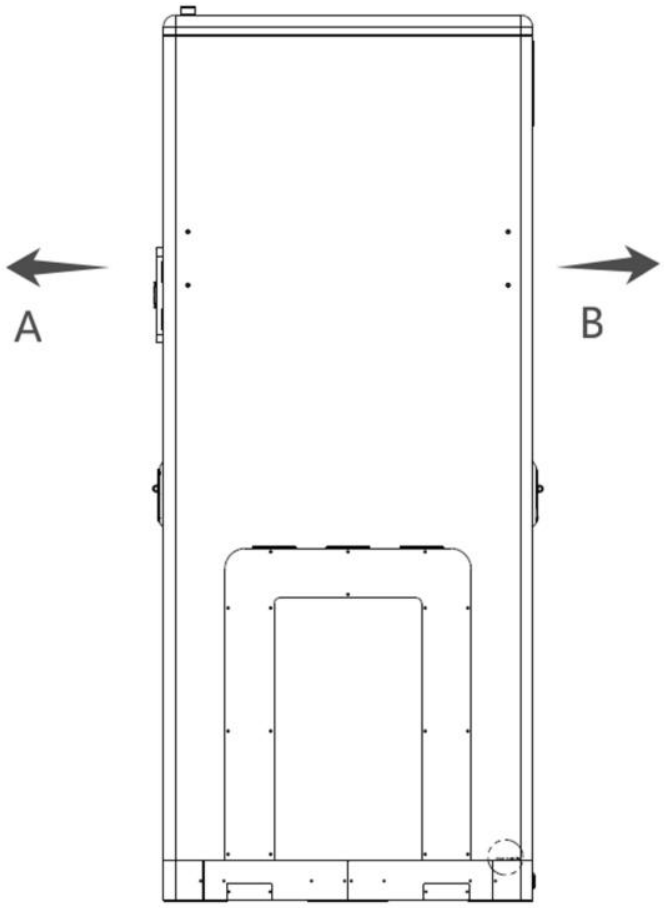

A ≥ 1300 mm: Ensure that the front door of the cabinet can be fully opened, allowing for proper ventilation and heat dissipation, as well as sufficient space for operation and maintenance.

B ≥ 1300 mm: Ensure that the back door of the cabinet can be fully opened, allowing for proper ventilation and heat dissipation, as well as sufficient space for operation and maintenance.

The wall-mounted installation requirements for G2-H30/H50-INV are shown in the following figure:

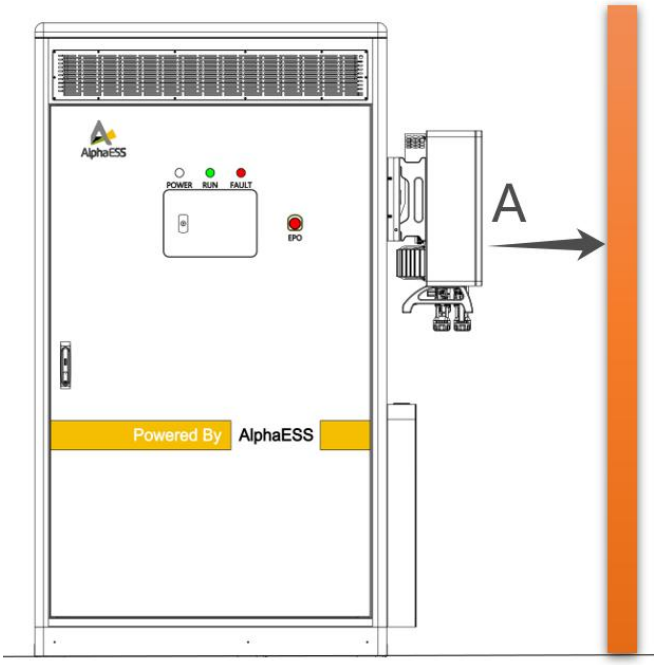

A ≥ 600 mm: Ensure that the PCS has enough space for operation and maintenance.

4.2 STORION-G2-H30/H50-O Outdoor Cabinet Body Fixing

NOTE

Before unpacking, check for obvious signs of damage to the packaging. If there are signs of damage, do not unpack. In this case, verify the system model, and contact the dealer as soon as possible.

After opening the packaging, check if all products are intact and undamaged. If there is any obvious damage to the appearance, contact the dealer as soon as possible.

4.2.1 Parts List

CAUTION

Check the parts list before installing the product. Power cables and communication cables should not be connected at will. Please check the material number before wiring.

The parts are described in the following table:

M7790-S/M38210-SC battery			
			
33300490(*BT-BT*) 1 pc Battery-to-battery communication cable Length 310mm	40100088 4 pcs Battery securing screw. M6*14		
System accessories			
	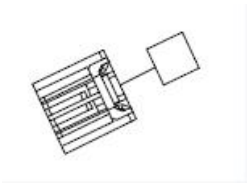	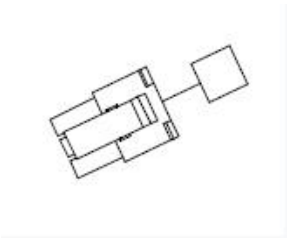	
1 pc 33300476 BMS communication cable, 750mm (for inter-battery communication	1 pc 33500056 Battery cluster terminal resistance.	1 pc 33501119 HV-BOX terminal resistance.	4 pc BAT handling hook

bridging)			
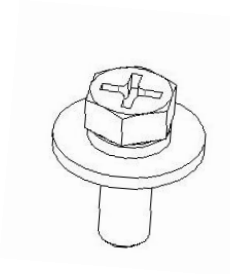	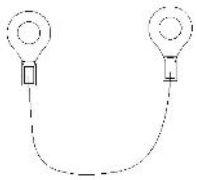		
40100211 1pcs Stainless steel 304 hex head bolt with spring washer and flat washer combination M10 * 30 Grounding screw	1pcs PCS grounding cable	2pcs Number of base decorative panels: 1 each	10pcs M4 * 14 combination screw
	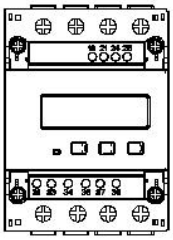	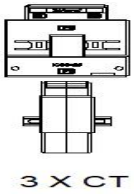	
\ 1pcs Touch screen pen	30500039 1pcs DTSU666 Meter	30300020 1pcs CT (80/5A)	
PCS accessories			
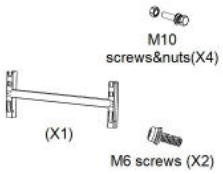			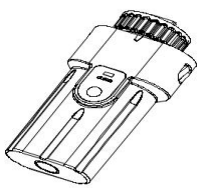

/ 1pcs PCS installation bracket and corresponding M10&M6 screws	/ 2pcs Communication cable protection cover	/ 8 pairs Quick connector for photovoltaic module wiring harness	/ 1pcs PCS COM1 Communication Plugin Module
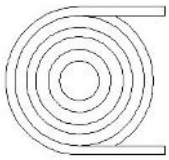	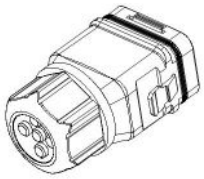	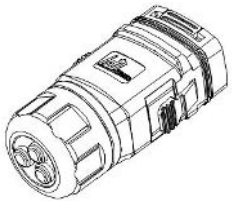	
/ 1pcs 10 meters reserved communication cable	/ 1pcs PCS COM2 Communication plugin module	/ 1pcs PCS COM3 Communication plugin module	

4.2.2 STORION-G2-H30/H50-O Outdoor Cabinet Installation

4.2.2.1 Transportation Conditions

All equipment within the STORION-G2-H30/H50-O outdoor cabinet, except for the battery and PCS, has been installed and fixed inside the outdoor cabinet before leaving the factory. For transportation, simply transport the outdoor cabinet.

CAUTION

To transport the STORION-G2-H30/H50-O outdoor cabinet, the following conditions must be met:

- All doors of the STORION-G2-H30/H50-O outdoor cabinet are securely locked.
- Select an appropriate forklift based on the site conditions. The chosen tool must have sufficient load-bearing capacity.
- If movement is required on slopes, additional traction devices may be required.

- Remove all existing or potential obstacles during the movement process, such as trees and cables.
- It is recommended that you transport and move the STORION-G2-H30/H50-O outdoor cabinet under favorable weather conditions whenever possible.
- Ensure that warning signs or safety barriers are set up to prevent unauthorized personnel from entering the lifting and transportation area, thereby avoiding accidents.

4.2.2.2 Forklift Transportation

If the installation site is flat, a forklift can be used to transport the STORION-G2-H30/H50-O outdoor cabinet. The bottom of the cabinet is equipped with fork holes specifically designed for forklift transportation. The cabinet can be moved using the front fork holes.

CAUTION

If you use a forklift for transportation, the following requirements should be met:

- The forklift should have adequate lifting capacity (at least 5 tons).
- The length of the forks should be at least 1100 mm.
- The transportation, movement, and lowering of the STORION-G2-H30/H50-O outdoor cabinet should be slow and stable. It is recommended to test the transport first.
- The STORION-G2-H30/H50-O outdoor cabinet should only be placed on a flat surface. The area should be free of any obstacles or bumps. The outer wooden crate must be removed before you use a forklift to transport the cabinet.

The schematic diagram of forklift transportation is shown below:

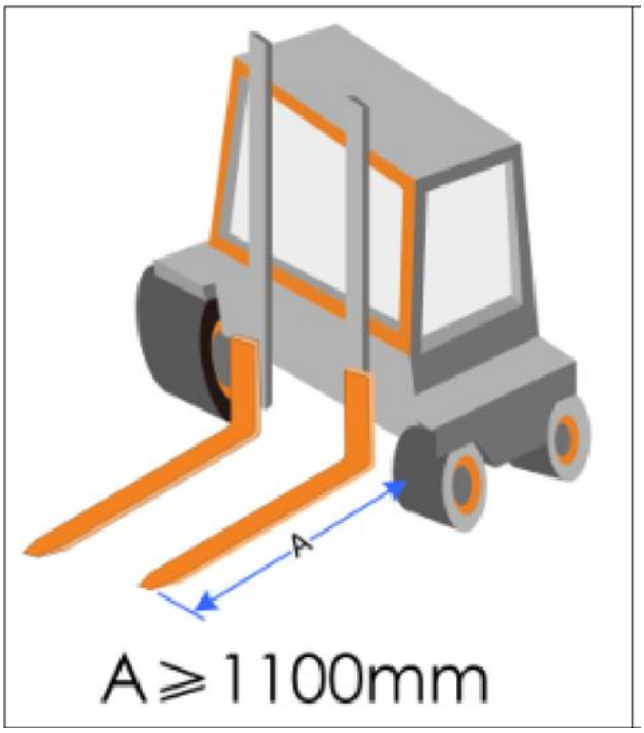

4.2.2.3 STORION-G2-H30/H50-O Equipment Installation

After you transport the STORION-G2-H30/H50 outdoor cabinet to the installation location with a forklift or other tools, secure its base with M8 screws (provided by the customer). The schematic diagram of the base is shown below:

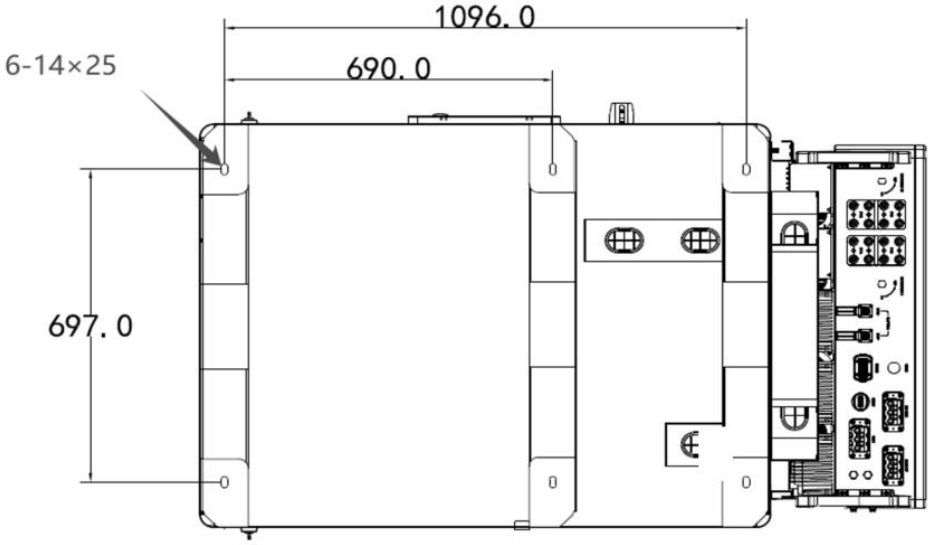

CAUTION

The wiring holes are located at the bottom of the STORION-G2-H30/H50-O outdoor cabinet, and the cables are passed through these holes into the cable trough.

When the STORION-G2-H30/H50-O outdoor cabinet needs to be fixed to the channel steel, Φ9 holes should be drilled in the channel steel, and the cabinet should be secured to the channel steel with screws. The schematic diagram of fixing in the steel groove is shown below:

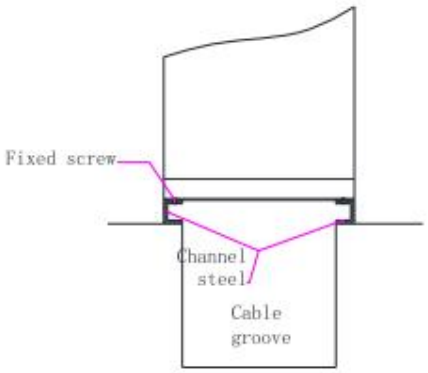

When the STORION-G2-H30/H50-O outdoor cabinet needs to be fixed to the concrete floor, holes need to be drilled into the floor and screws should be used to secure the cabinet. Connect the grounding point at the bottom of the rear door of the STORION-G2-H30/H50-O outdoor cabinet to the on-site grounding point using a grounding wire, and tighten it with bolts after connection. The schematic diagram for fixing the cabinet to the concrete floor is shown below:

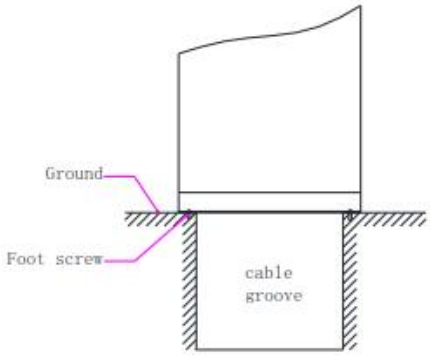

WARNING

Ensure that the STORION-G2-H30/H50-O outdoor cabinet is reliably grounded. If it is not connected or is loose, this may lead to electric shock. It is recommended that the exterior of the grounding terminal be painted after the grounding wire is installed for protection.

4.2.3 PCS Wall-Mounted Device Installation

The installation diagram of wall-mounted equipment is shown below:

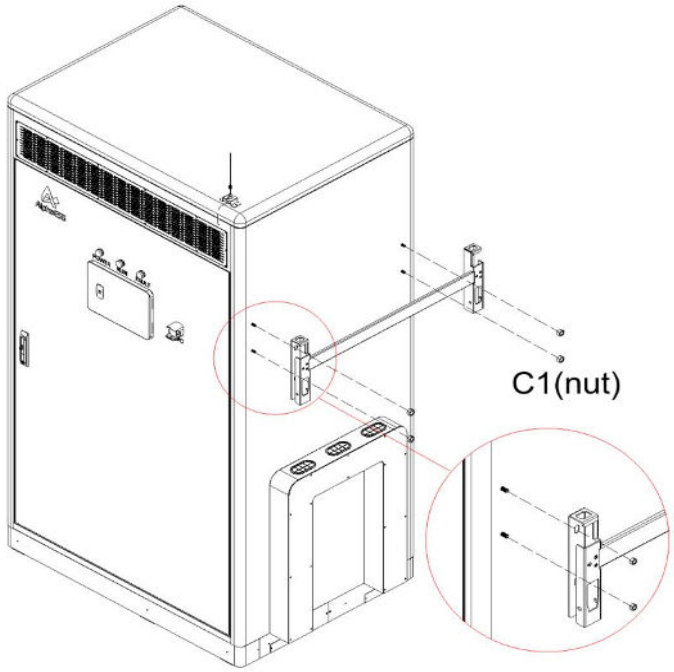

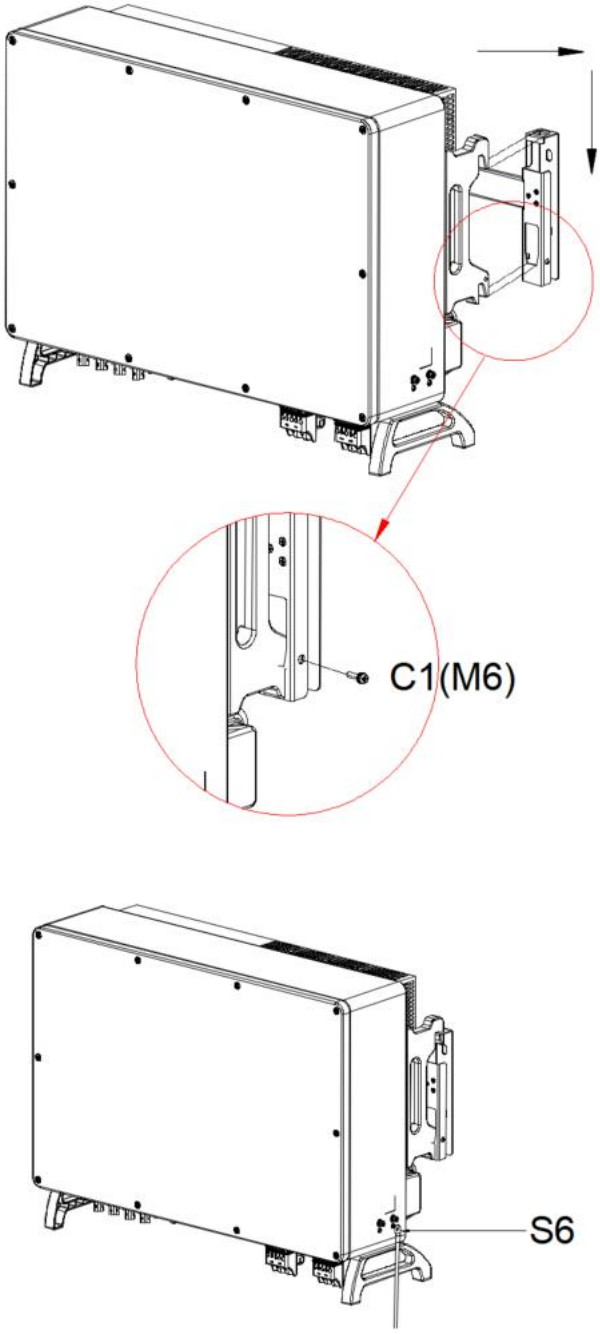

The PCS wall-mounted installation parts are described in the following table.

Number	Explanation
1	PCS wall mounting plate (included in the pcs packaging box)
2	PCS wall mounting plate installation screws

3	PCS equipment body

The installation steps for PCS wall-mounted devices are described in the following table.

Steps	Explanation
Step 1	Install the PCS wall mounting plate on the right side of the STORION-G2-H30/H50-O outdoor cabinet using four screws and the PCS wall mounting plate.
Step 2	The PCS device is directly wall-mounted on the PCS wall mounting plate.
Step 3	Secure and tighten the PCS device to the bracket with M6 screws.

4.3 Battery Installation

Step 1

When you install the product, install the protective ground wire first. When you disassemble the product, remove the protective ground wire in the last step. The STORION-G2-H30/H50-O outdoor cabinet system includes both internal and external grounding, and the grounding of the internal equipment of the system has been completed before delivery. The following figure shows the location of the external grounding points. After the grounding connection is completed, the grounding resistance must be measured. The grounding resistance value should comply with the relevant standards of the country/region where the project is located.

NOTE

The recommended cross-sectional area for the grounding wire used for the external grounding of the system is 16 mm² or greater.

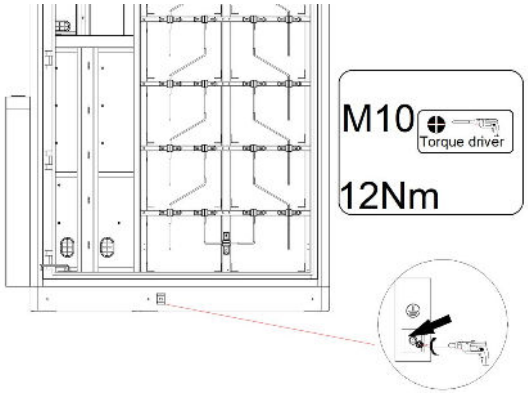

CAUTION

The grounding resistance should be less than 4 Ω.

Step 2

Open the rear door, refer to the diagram for the positive pole position, and install the positive power cable for the battery according to the actual number of batteries.

The schematic diagram of the connection between the wire harness and copper bar is shown below:

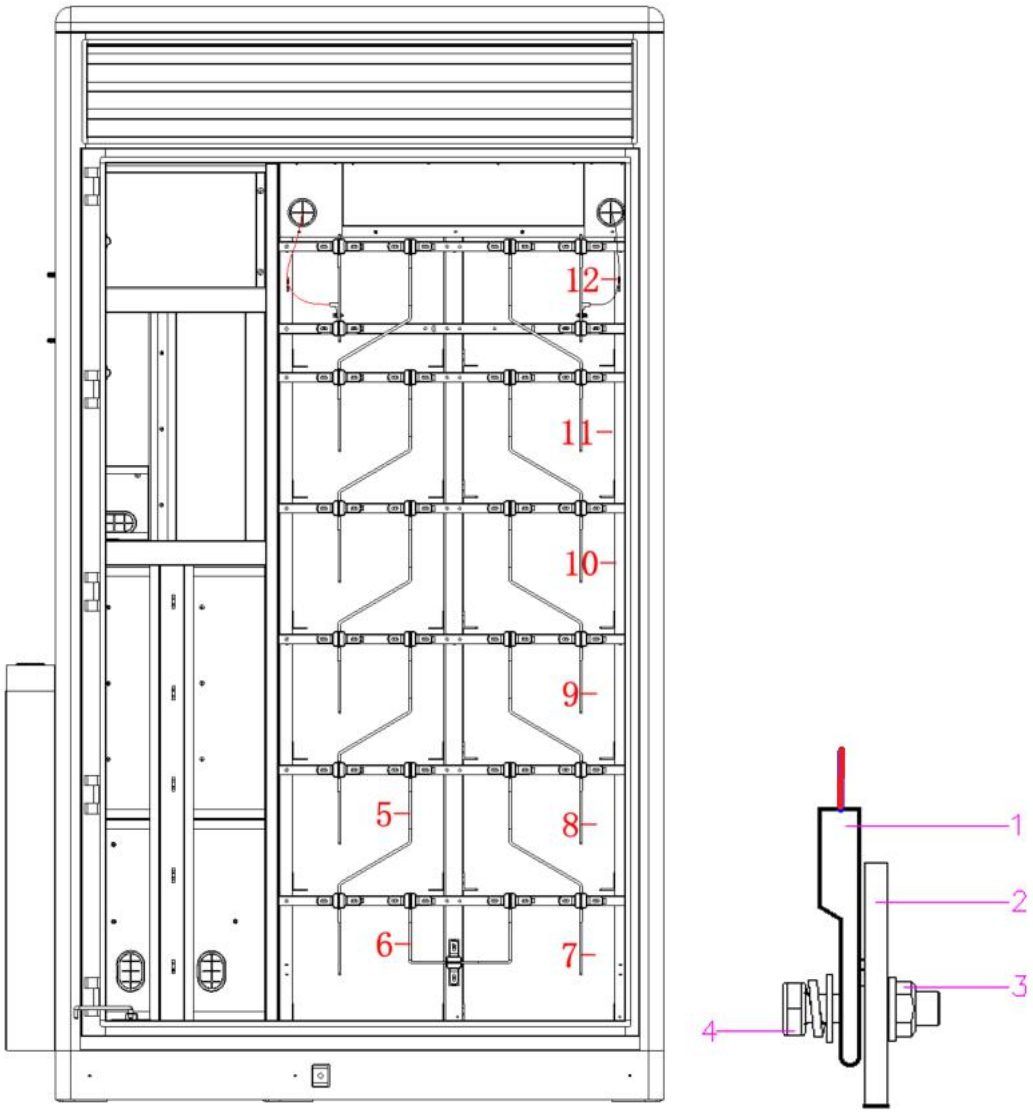

The wiring harness and copper bar connection configuration are described in the following table:

Number	Description
1	Power cable (copper lugs)
2	copper busbar

3	M8 flange nut
4	M8 three-piece screw set

Step 3

Refer to the following diagram to unpack the battery:



The schematic diagram of screw fixation is shown below:

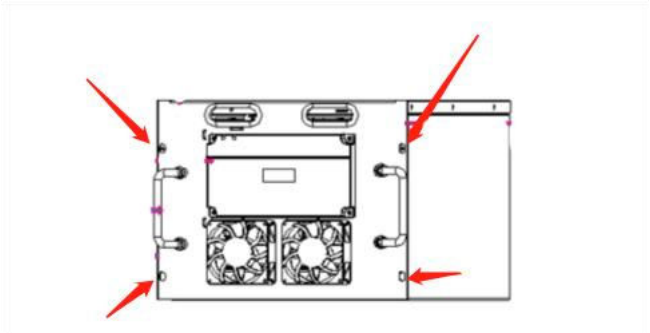

The battery assembly location diagram is shown below:

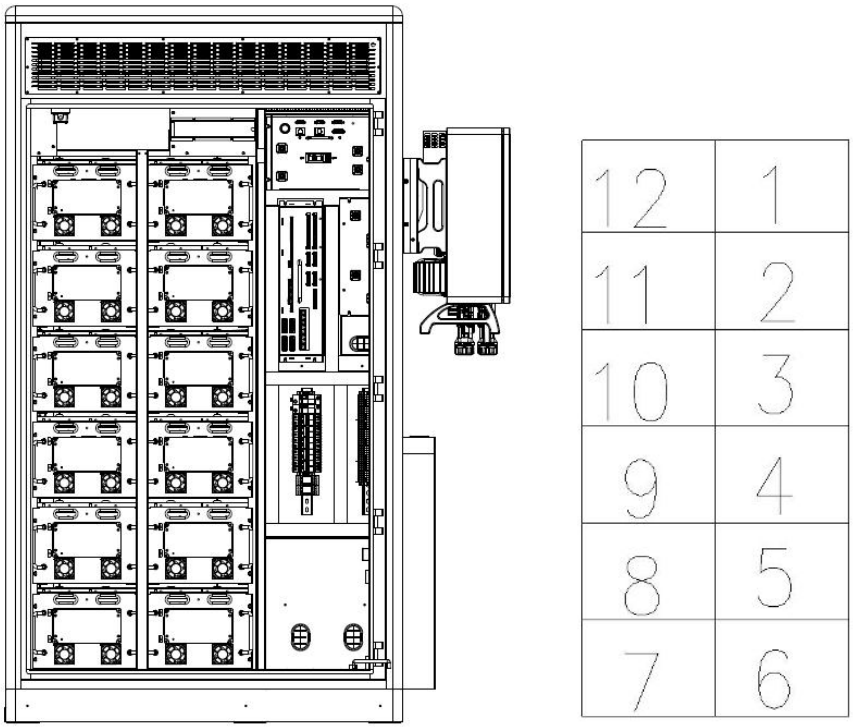

The steps for unpacking and installing batteries are described in the following table.

Step	Description
Step 1	Open all the battery packaging, and be careful not to lose any internal accessories.
Step 2	Check the battery model on the label and inspect the battery insulation and voltage. If there are no issues, you can proceed with the installation.
Step 3	Open the front door.
Step 4	Place the same cluster of batteries on the same battery rack, with serial numbers from 05 to 12 arranged sequentially (if there are less than 12 batteries, install them sequentially according to the order shown in the diagram). Use the matching screws to secure the batteries to the battery rack.

Step 4

According to the configuration differences of different projects, the communication cables between batteries are set up accordingly. The connection sequence and terminal resistor positions are shown in the following figure: Schematic diagram of communication cable connection sequence and terminal resistor positions. Please use the communication cable from the battery parts list to connect the batteries to each other.

CAUTION

- **The part numbers for the communication cables and terminal resistors between batteries should be selected according to the material configuration in the parts list to match the communication cables and terminal resistors between batteries.**

The schematic diagram of the connection sequence of communication cables and the location of terminal resistors is shown below:

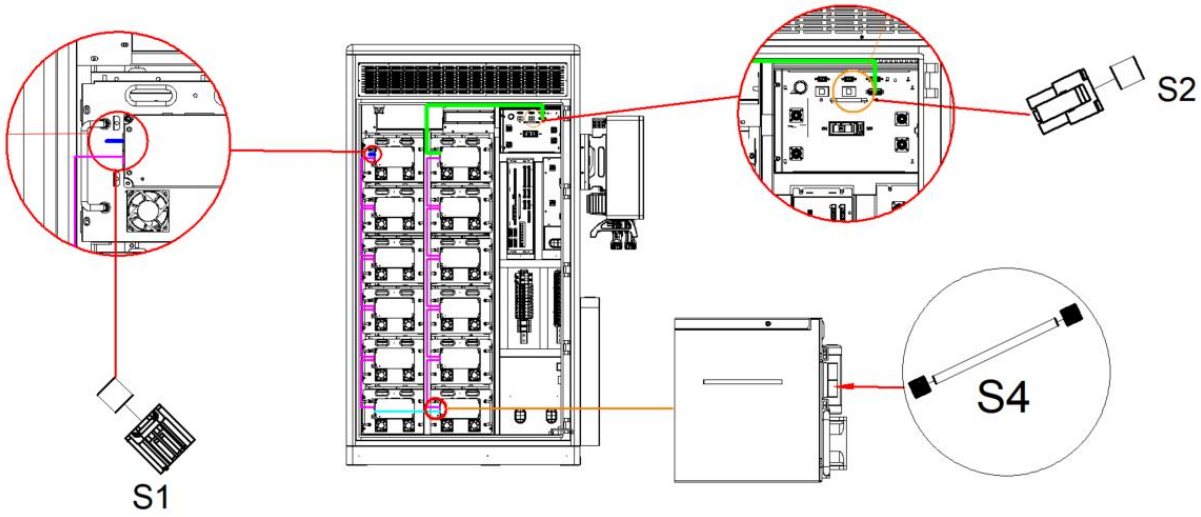

1. Please use the terminal resistors from the system accessory parts list and insert them into the CAN port of the last battery in each battery cluster.
2. Use the communication cables from the system accessory parts list to connect the LMU port on the high-voltage box to the batteries.

4.4 Electrical Connections

4.4.1 Safety Precautions

Throughout the entire process of making electrical connections and during all other operations on equipment such as the energy storage integration system, the following safety precautions must be observed:

- Disconnect all external connections to the energy storage integration system, as well as connections to the internal power supply of the equipment.
- Ensure that all disconnections are not accidentally re-energized.
- Use a multimeter to ensure that the equipment is completely de-energized
- Implement necessary grounding.
- Insulate parts of the operation that may be near live components with insulating material.

4.4.2 Communication Connection Between System Cabinet and PCS

The communication connection diagram between the system cabinet and PCS is shown below:

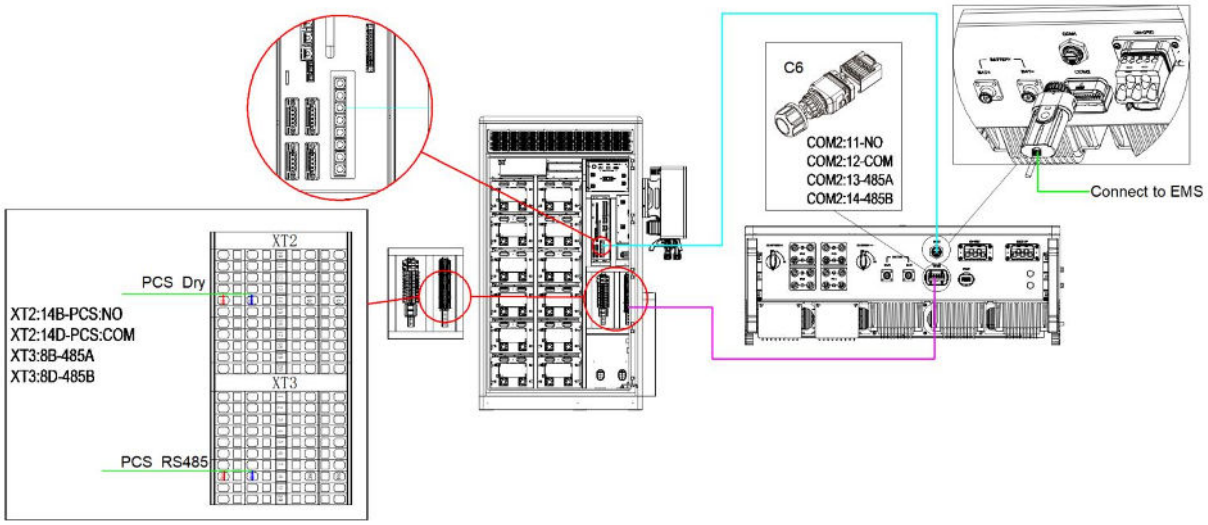

1. Connect the PCS to the outdoor cabinet debugging communication harness, and use the reserved harness to connect the PCS COM2 (COM2:13/COM2:14) to the outdoor cabinet terminal block (XT3:8B/XT3:8D) (already wired).

2. Connect the PCS to the outdoor cabinet communication harness, and use the reserved harness to connect the PCS COM1 port to the TOP BMU Box LAN1 port (at the switch) (already wired).

3. Connect the PCS to the outdoor cabinet dry contact harness, and use the reserved harness to connect the PCS COM2 (COM2:11/COM2:12) to the outdoor cabinet terminal block (XT2:14B/XT2:14D) (already wired).

4.4.3 Battery Power Cable Connection

Connect the battery power cable of the system to the battery power wiring port of PCS, as shown in the following figure:

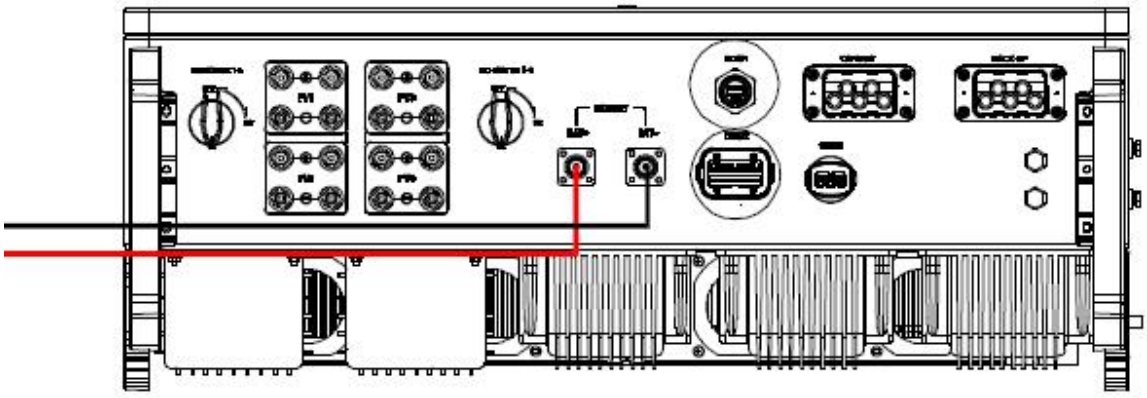

4.4.4 Communication Connection between Expansion Cabinet and System Cabinet (Optional)

1. Thread the AC power supply cable pre-connected to the high-voltage box of the expansion cabinet into the system cabinet through the wire hole in the upper right corner, and connect it to the vacant AC power supply port on the high-voltage box of the system cabinet along the inner wire slot.

2. Thread the BCMU communication cable pre-connected to the high-voltage box of the expansion cabinet into the system cabinet through the wire hole in the upper right corner. Connect it to the BCMU communication port on the high-voltage box of the system cabinet along the inner wire slot, and then connect the terminal resistor of the high-voltage box of the system cabinet to the vacant BCMU communication port of the expansion cabinet.

The communication cables between the expansion cabinet and the system cabinet are shown in the following figure:

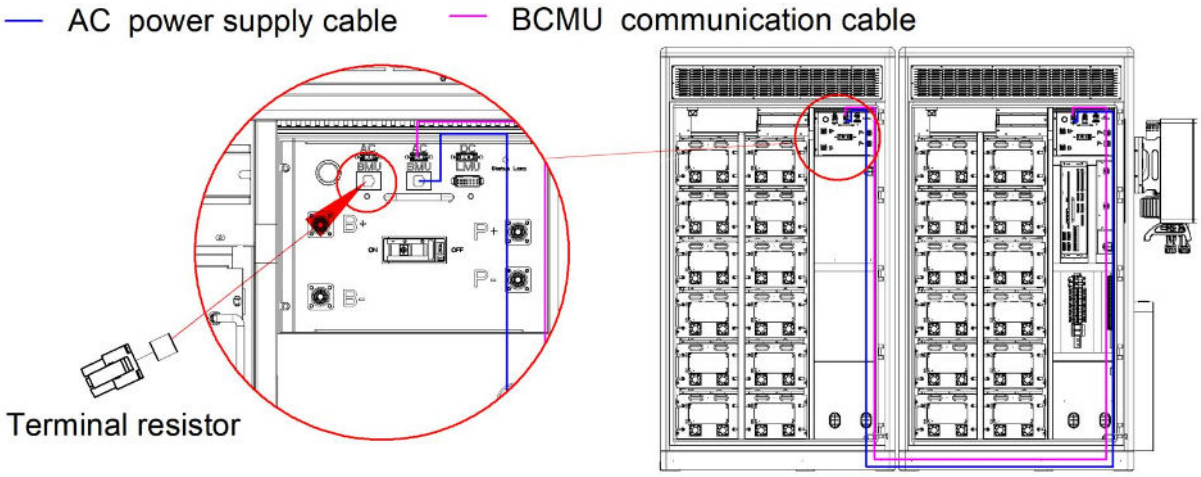

3. Thread the smoke and temperature detector cable of the expansion cabinet into the system cabinet through the wire hole in the upper right corner, and connect it to the system cabinet terminal block (XT2:2D/XT2:3D) along the inner cable tray;

The schematic diagram is as follows:

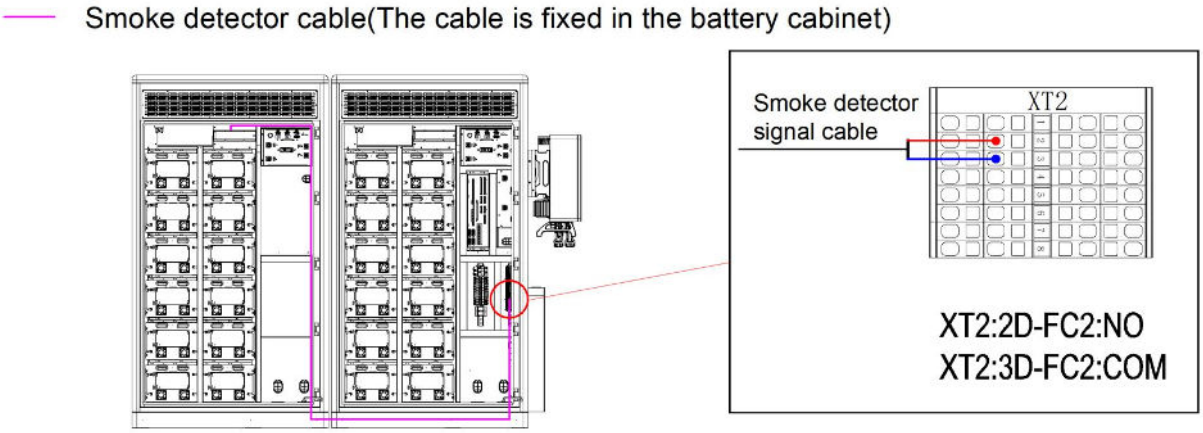

4.4.5 Expansion Cabinet Battery Power Line Connection (Optional)

Route the P+/P- power cables from the pre-connected high-voltage box of the expansion cabinet through the wire hole on the upper right side into the system cabinet, and connect them to the BAT2+/BAT2- terminals of the junction box along the outer cable groove.

The power wiring of the expansion cabinet and system cabinet is shown in the following figure:

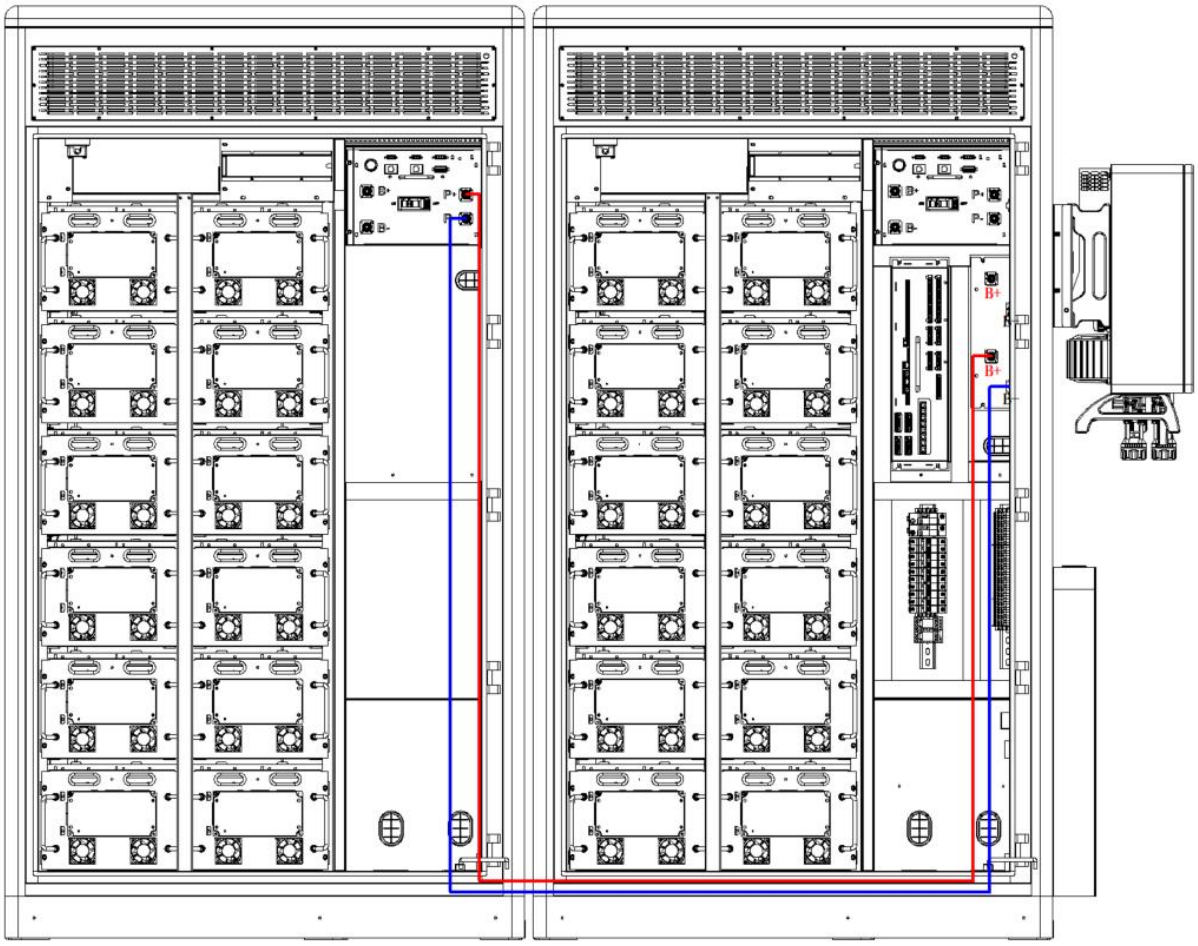

4.4.6 AC Load Cabling

1. Ensure the correct phase sequence on the AC side of the connection.
2. Use a multimeter to measure and ensure there is no voltage on the cables connected to the copper busbar.
3. Connect the L1/L2/L3 phases and N phase of the circuit breaker on the PCS side to the L1/L2/L3 phases and N phase of the load port on the PCS, respectively.
4. Make sure the connections are secure.

CAUTION

Pass the AC cable bundle through the center hole of the connector, and then continue to install it on the PCS side.

The schematic diagram of the AC load connection is shown below:

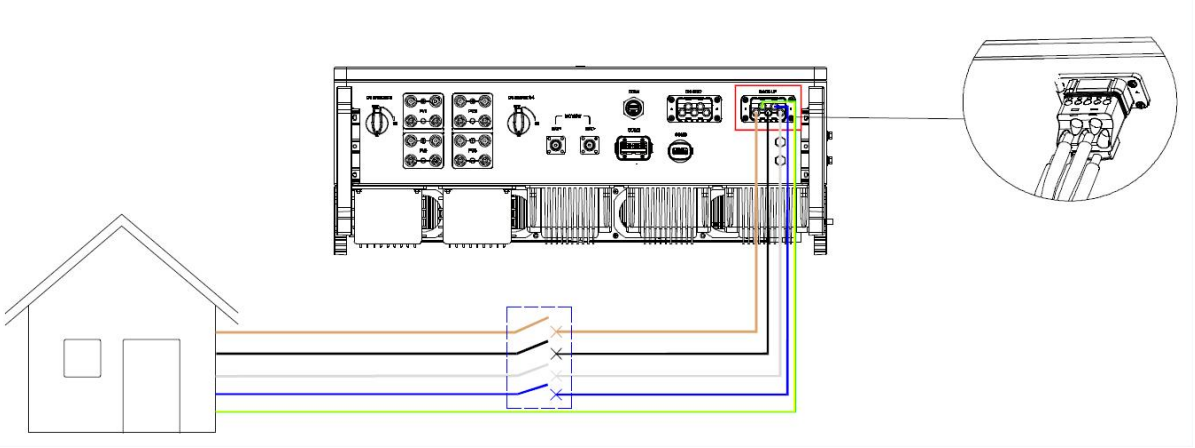

4.4.7 AC Power Grid Cabling and Electricity Meter

4.4.7.1 AC Power Grid Cabling

1. Ensure the correct phase sequence on the AC side of the connection.
2. Use a multimeter to measure and ensure there is no voltage on the cables connected to the copper busbar.
3. Connect the L1/L2/L3 phases and N phase of the circuit breaker on the PCS side to the L1/L2/L3 phases and N phase of the load interface on the PCS, respectively.
4. Make sure the connections are secure.

CAUTION

Pass the AC cable bundle through the center hole of the connector, and then continue to install it on the PCS side.

The schematic diagram of AC power grid connection is shown below:

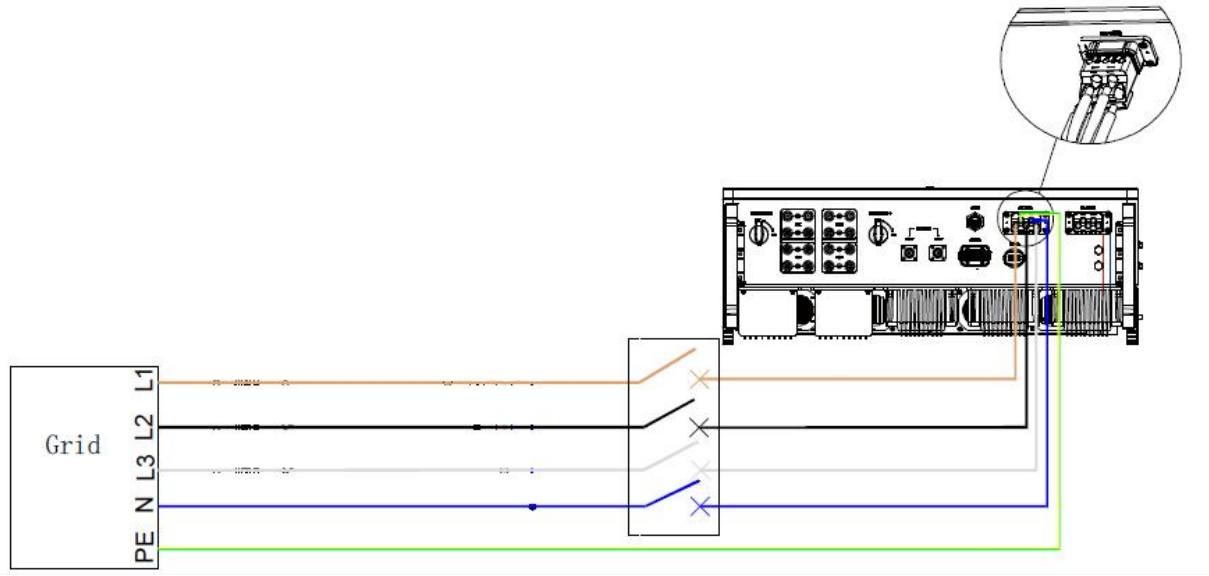

NOTE

Install a circuit breaker between the power grid and the PCS. Please note that AlphaESS does not provide this circuit breaker. If a circuit breaker is installed, there is no need for a leakage protector between the power grid and the PCS.

4.4.7.2 Electrical Meter Cabling

1. The L1/L2/L3/N phases of the power grid are connected to the 1/4/7/10 terminals of the electricity meter, respectively, to provide power supply and voltage sampling for the meter.
2. The L1 phase of the power grid is threaded through the P1 side of the meter's CT and exits through the P2 side, connecting to the L1 phase of the grid side of the energy storage inverter. The secondary side port S1 of the meter's CT is connected to port 31 of the meter, and the secondary side port S2 is connected to port 33 of the meter.
3. The L2 phase of the power grid is threaded through the P1 side of the meter's CT and exits through the P2 side, connecting to the L2 phase of the grid side of the energy storage inverter. The secondary side port S1 of the meter's CT is connected to port 34 of the meter, and the secondary side port S2 is connected to port 36 of the meter.

4. The L3 phase of the power grid is threaded through the P1 side of the meter's CT and exits through the P2 side, connecting to the L3 phase of the grid side of the energy storage inverter. The secondary side port S1 of the meter's CT is connected to port 37 of the meter, and the secondary side port S2 is connected to port 39 of the meter.

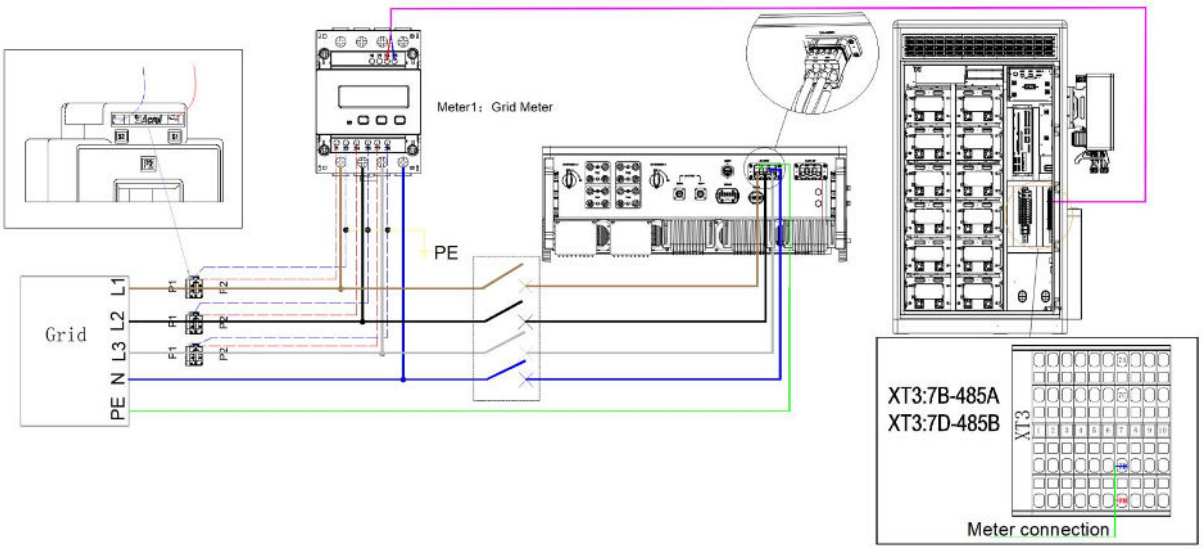

4.4.7.3 Schematic Diagram of Positive Direction of Electricity Meter Wiring

The forward wiring diagram of the electricity meter is shown in the following figure:

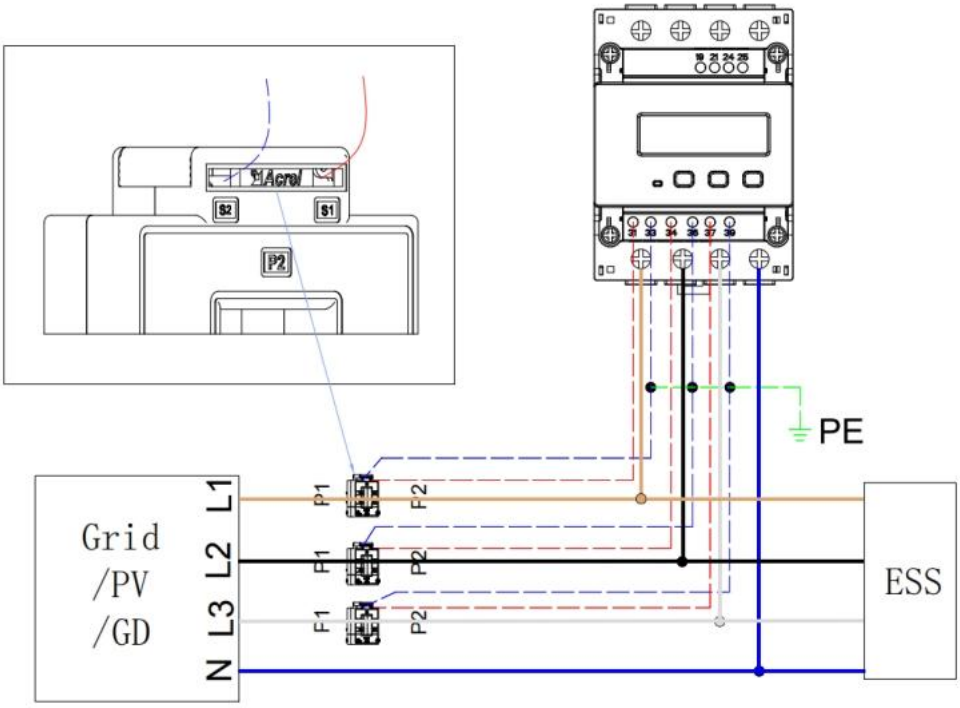

The positive direction corresponding to the positive value of the energy storage meter data is defaulted as shown in the preceding figure. The meters installed by STORION-G2-H30/H50-O include grid gateway meters, PV grid connection point meters, and diesel electromechanical meters.

4.4.7.4 Electricity Meter Settings

The steps to set the communication address or baud rate of the electricity meter are as follows:

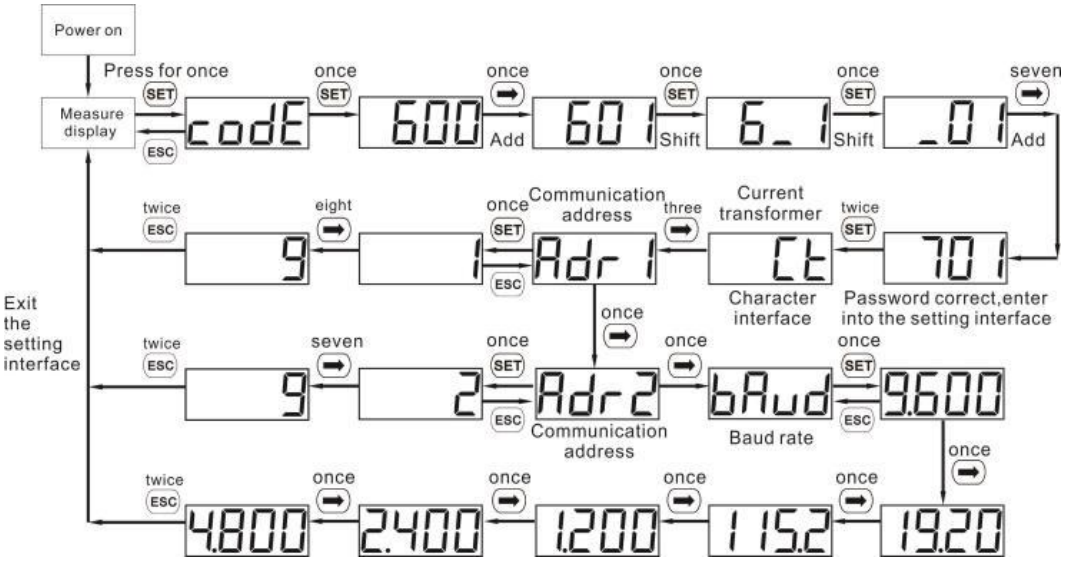

According to this step, the baud rate can be checked and the communication address can be set. The corresponding communication addresses and baud rates for each meter are as follows:

Utility Meter Address	101
PV Meter Address	121
DG Meter Address	182
Electricity Meter Communication Baud Rate	9600

4.4.8 Dual Power Supply Mode Connection

4.4.8.1 AC Side Power Cable Connection

1. The L1/L2/L3 phases and N phase on the grid side are respectively connected to the A1/B1/C1 phases and N1 phase of the AC input of the ATS cabinet.
11. The L1/L2/L3 phases and N phase of the diesel engine are respectively connected to the A2/B2/C2 phases and N2 phase of the AC input of the ATS cabinet.
12. The A/B/C/N/PE terminals of the ATS cabinet are connected to the Grid ports L1/L2/L3/N/PE of the PCS.

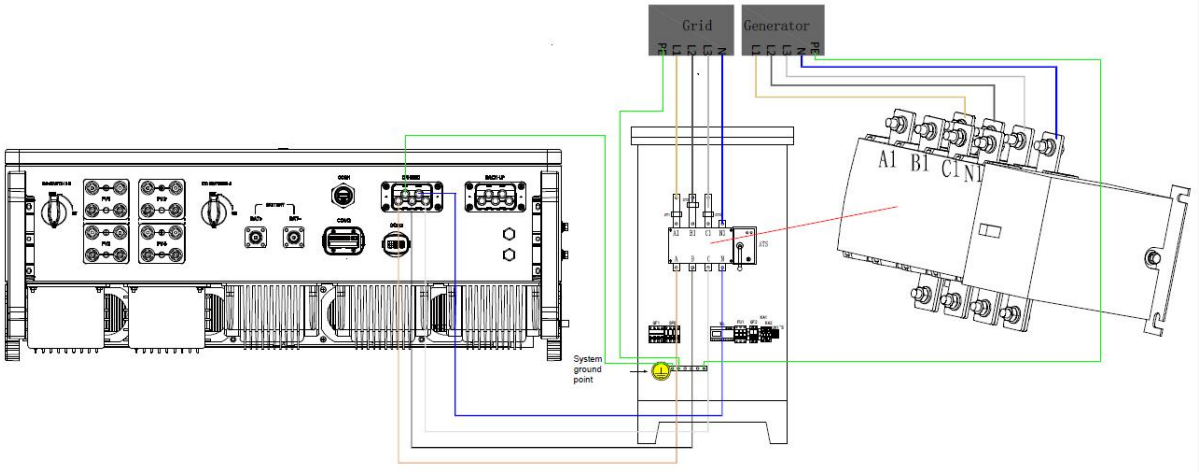

4.4.8.2 Communication Line Connection

Perform dry node communication between the ATS cabinet and the system cabinet, connect the (X1:1/X1:2/X1:3/X1:4) ports of the ATS cabinet to the terminal block of system cabinet (XT2:4B/XT2:4D/XT2:5B/XT2:5D).

The connections are described in the following table.

ATS Cabinet	STORION-G2-H30/H50 Outdoor Cabinet
X1:1	XT2:4B
X1:2	XT2:4D
X1:3	XT2:5B
X1:4	XT2:5D

The connection diagram is shown below:

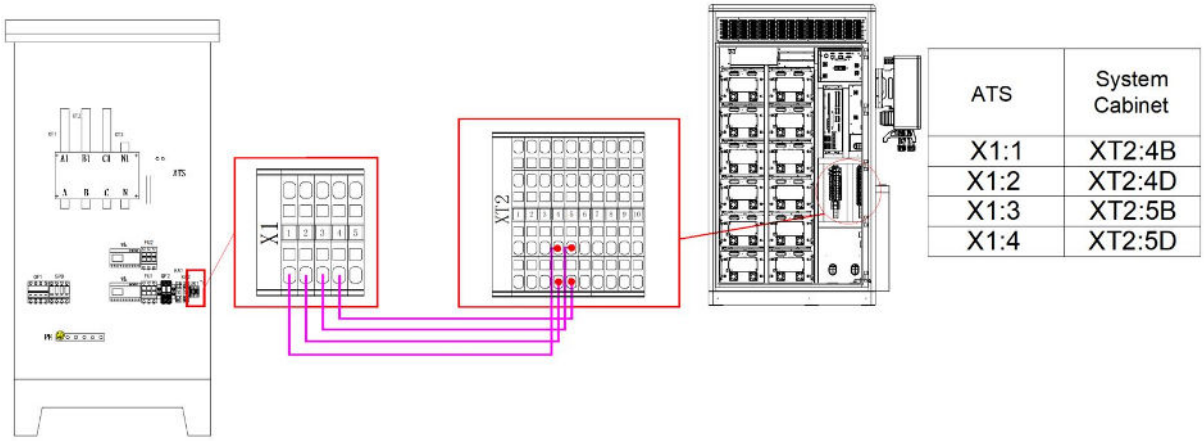

ATS	System Cabinet
X1:1	XT2:4B
X1:2	XT2:4D
X1:3	XT2:5B
X1:4	XT2:5D

NOTE

The dry contact voltage is 24V. It is recommended to use a 2-core shielded twisted pair cable with a cross-sectional area of 0.75m² or more.

4.4.9 Off-Grid Diesel Dry Contact Connection

Diesel generator dry contact wiring, please connect the diesel generator dry contact (NO/COM) to the system cabinet (XT2:13B/XT2:13D), as shown in the following schematic diagram:

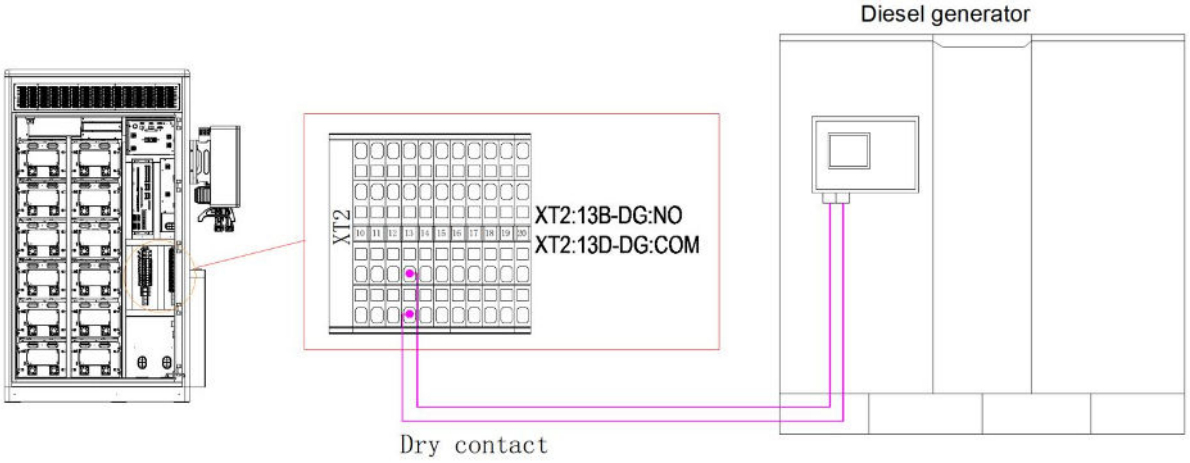

CAUTION

After the wiring is completed, plug the entry hole with fireproof mud or other flame-retardant materials that have good sealing properties.

4.4.10 System Cabinet Auxiliary Power Supply Cabling

The system cabinet auxiliary source wiring requires the customer to connect the AC auxiliary source wire to the system cabinet terminal block (XT1:1B/XT1:2B) for connection, as shown in the following schematic diagram.

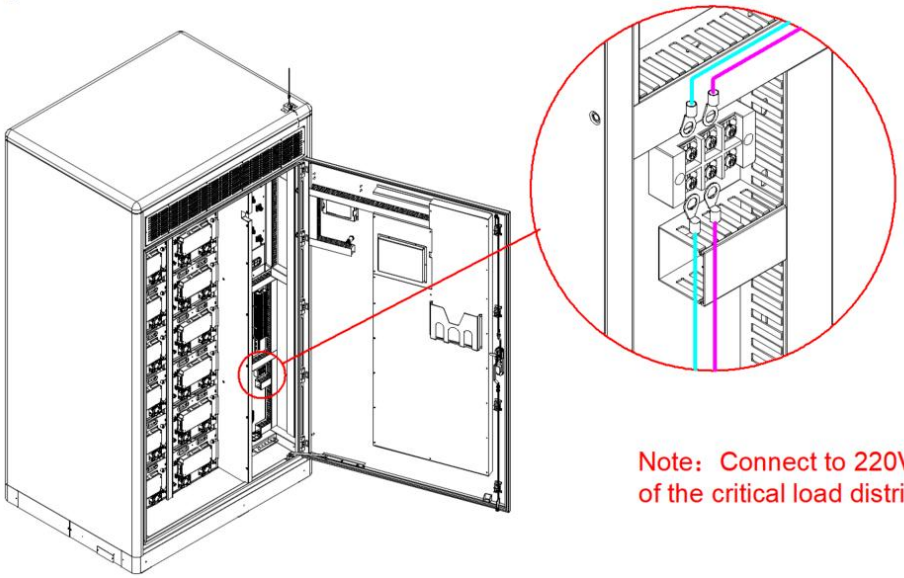

Note：Connect to 220V/230V AC power supply of the critical load distribution cabinet.

4.4.11 System Parallel Connection Cabling

4.4.11.1 Grid-side Connection (Load Connected to the GRID Side)

1. Ensure the correct phase sequence on the AC side of the connection.
2. Use a multimeter to measure and ensure there is no voltage on the cables connected to the copper busbar.
3. Connect the L1/L2/L3 phases and N phase of the circuit breaker on the PCS side to the L1/L2/L3 phases and N phase of the load port on the PCS, respectively.
4. Make sure the connections are secure.

CAUTION

Pass the AC cable bundle through the center hole of the connector, and then continue to install it on the PCS side.

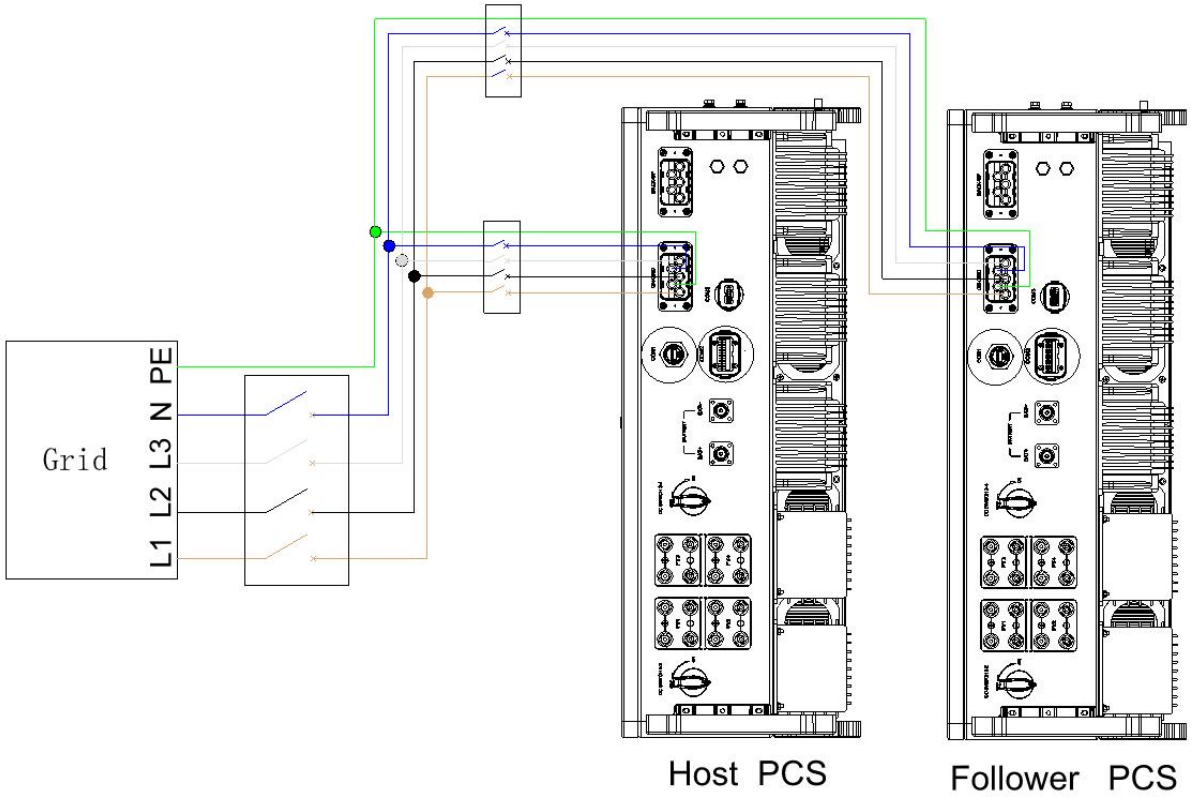

4.4.11.2 Communication Cable Connection

1. Connect the host SCADA to the slave SCADA using an Ethernet cable, with the connection made at the switch of the SCADA system.
2. Connect the auxiliary power sources to the system, respectively.
3. The electricity meter communication is connected only to the main system.

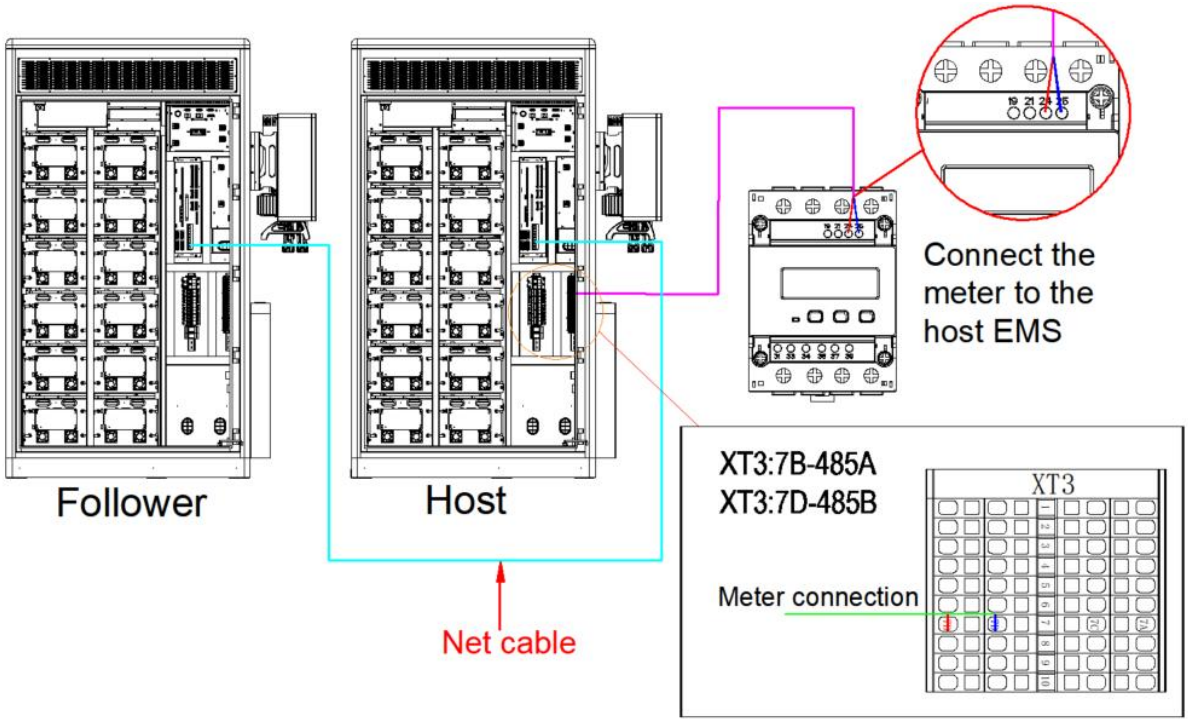
Follower
Host
Net cable
Connect the meter to the host EMS
XT3:7B-485A
XT3:7D-485B
Meter connection
XT3

5. Startup and Operation

After the system wiring is completed, perform the following steps before proceeding with the operation:

1. Measure the input voltage of the high-voltage box with a multimeter. The voltage range is detailed in the system normal voltage range table at the end of the document.
2. In addition, use an insulation meter to measure the insulation resistance (B+ to ground/B- to ground) of the input terminal of the high-voltage box, with an insulation resistance of ≥ 1 MΩ.
3. For more information, see the operation manual.

6. Technical Contact

If you have any technical issues with our products, please contact us. The contact information can be found on the front page of this manual. To help us quickly resolve your issue, please provide the following information:

A. System configuration

B. Product serial number

C. Software version number

D. Fault information

E. Photovoltaic module information

7. Attachment

System Installation of a Torque Wrench

Number	Position	Specifications and Materials	Quantity	Torque(Nm)
1	Single battery fixed	Screw, Phillips head with external hex and triple combination, M6*14, stainless steel.	4pcs	5±10%
2	AC plastic case	M8 stainless steel screws, grade 4.8 bolts, white zinc plated.	4pcs	10±10%
3	PCS wall mounting plate	M8 stainless steel screw	4pcs	10±10%
4	Back-mounted copper busbar for direct current positive and negative.	M8 stainless steel screw Nut, flange, M8	2pcs	10±10%
5	external grounding fixation	M10*35 carbon steel, grade 4.8 bolt, white zinc plated	1pcs	15±10%

NOTE

Please follow the recommended torque values in the table. If there are any special or abnormal situations, please provide your feedback to an AlphaESS engineer.

System Normal Voltage Range Table

Number of Batteries	M7790-S	M38210-SC
5	360~422.4V	\
6	432~506.88V	\
7	504~591.36V	\
8	576~675.84V	288~345.6V
9	\	324~388.8V
10	\	360~432V
11	\	396~475.2V
12	\	432~518.4V

@AlphaEnergyStorageSystem @AlphaESS @alpha_ess @AlphaESS www.alphaess.com

Alpha ESS Co., Ltd.
+86 513 8060 6891
info@alpha-ess.com
www.alphaess.com
No. 1086 Bihua Road, Tongzhou District, Nantong City, Jiangsu Province, China

Alpha ESS International Pte. Ltd.
+65 6513 1125 / +65 6513 1126
Singapore@alpha-ess.com
2 Corporation Road #01-06A Corporation Place 618494 Singapore

Alpha ESS Europe GmbH
+49 610 3459 1601
europe@alpha-ess.de
www.alphaess.de
Paul-Ehrlich-Straße 1a, Langen, Hessen D-63225 Germany

Alpha ESS Australia Pty. Ltd.
+61 02 9000 7676
techsupport@alphaess.au
www.alphaess.au
8/15-21 Gibbes Street, Chatswood, NSW 2067 Australia

Alpha ESS UK Co., Ltd
+44 330 043 2610
info@alpha-ess.com
Drake house, Long street, Dursley, gl11 4hh UK

Alpha ESS Italy S.r.l.
+39 339 462 4288
info@alphaess.it
www.alphaess.it
Via Del Molinuzzo 83, 59100 Prato (PO), Italy

Alpha ESS NZ Ltd.
+64 0800 769 377
info@alpha-ess.com
www.alpha-ess.co.nz
19 Arrenway Drive, Albany, 0630, New Zealand

Alpha ESS USA, Inc.
+1 800 220 0725 (Service Inquiries)
service@alphaess.us
www.alphaess.us
2180 S Ivanhoe St. Unit 5 Denver.CO 80222 USA

Alpha ESS South Africa (Pty.) Ltd.
+27 010 745 5653
measervice@alpha-ess.com
Johannesburg, South Africa

Alpha ESS Korea Co., Ltd
info@alpha-ess.com
2F, 19-4, Nohyeong 11-gil, Jeju-si, Jeju-do, Republic of Korea

Alpha ESS Japan, Inc.
info@alpha-ess.com
www.alphaess.jp