Installation and Operation Manual for CPS Smart Power Controller SAU100N2-DIO-EU



Shanghai Chint Power System Co., Ltd.

Doc Version 1.0 October 9, 2025 Doc No.: 9.0020.1018A0

Table of Contents

0 Preface 3
1 IMPORTANT SAFETY INSTRUCTIONS 4
1.1 Warnings and Symbols in this Document 4
1.2 Markings and Meanings on the Device 5
1.3 Safety Precautions of Operating the Product 5
2 General Introduction 7
2.1 Appearance and Dimensions 7
2.2 Bottom Connections 8
2.3 Internal Structure 9
2.4 System Schematic Diagram 10
3 Mechanical Installation 11
3.1 Unpacking for Inspection 11
3.2 Installation Requirements 11
3.3 Installation Procedures 12
4 Electrical Connection 14
4.1 Recommended Tools and Usages 14
4.2 Cable Specification 15
4.3 Electrical Connection 15
5 Dry Contact Indicator 23
6 Dry Contact Function Configuration 24
6.1 Dry Contact Configuration via App 24
6.2 Dry Contact Function Configuration via Web Interface 33
7 Maintenance 38
7.1 Regular Maintenance 38
7.2 Troubleshooting 38
8 Technical Data 41

0 Preface

Thank you for choosing SAU100N2-DIO-EU Smart Power Controller developed by Shanghai Chint Power System Co., Ltd. (hereinafter referred to as "CHINT").



IMPORTANT!

Please read this manual carefully and make sure that you have understood all the contents thoroughly before you start any operation.

Main Contents

Safety precautions, device overview, installation, operation and maintenance, technical data are mainly introduced in this manual.

Target Reader

This manual is applicable to the work staff of wiring, installation, maintenance and daily management of the product.

Manual Management

Please store this manual together with related documents of other device components, and make sure keep it at hand for quick reference and easy use.

Copyrights

CHINT reserves all rights in this manual. Any reproduction, disclosure or copy in whole or in part is forbidden without prior written authorization. CHINT doesn’t accept any responsibilities whatsoever for potential errors or possible lack of information in this document.

1 IMPORTANT SAFETY INSTRUCTIONS

(SAVE THESE INSTRUCTIONS)

PLEASE READ THIS USER MANUAL CAREFULLY BEFORE THE INSTALLATION AND OPERATION OF THIS PV INVERTER. CHINT POWER RESERVES THE RIGHT TO REFUSE WARRANTY CLAIMS FOR EQUIPMENT DAMAGE IF USERS FAIL TO INSTALL THE EQUIPMENT ACCORDING TO THE INSTRUCTIONS IN THIS MANUAL.

FAILURE TO FOLLOW THESE INSTRUCTIONS AND OTHER RELEVANT SAFETY PROCEDURES MAY RESULT IN VOIDING OF THE WARRANTY AND/OR DAMAGE TO THE INVERTER OR OTHER PROPERTY!

1.1 Warnings and Symbols in this Document

Symbol	Meanings
	**DANGER!** DANGER indicates a hazardous situation with high level of risk which, if not avoided, will result in death or serious injury.
	**WARNING!** WARNING indicates a hazardous situation with medium level of risk which, if not avoided, could result in death or serious injury.
	**CAUTION!** CAUTION indicates a hazardous situation with low level of risk which, if not avoided, could result in minor or moderate injury.
	**NOTICE!** NOTICE indicates a hazardous situation which, if not avoided, could result in equipment working abnormally or property loss.
	**IMPORTANT!** IMPORTANT indicates important supplementary information or provides skills or tips that can be used to help you solve a problem or save you time.

1.2 Markings and Meanings on the Device

Symbol	Meanings
	**HIGH VOLTAGE!** Danger to life due to high voltage! All work on the device must only be performed by qualified personal as described in this document.
	**HOT!** The equipment is designed according to international safety standards, but surfaces can become hot during operation. DO NOT touch the peripheral surfaces during or shortly after operation.
	**EARTH GROUND!** This symbol marks the location of grounding terminal, which must be securely connected to the earth through the PE (protective earth) cable to ensure operational safety.
	**RoHS SYMBOL** In accordance with 2011/65/EU regulations, the inverter imposes restrictions on the use of specific hazardous substances in electrical and electronic equipment.

1.3 Safety Precautions of Operating the Product

Symbol	Meanings
	**DANGER!** • Touching the wiring terminals inside the device may result in death by electric shock! • DO NOT touch the terminals or conductors connected with PV modules or PV inverters, which may result in death by electric shock!
	**WARNING!** • All the installation and wiring connections should be performed only by qualified technical personnel. • Make sure both the AC and DC sources are disconnected, and the shell of device is securely grounded to avoid electric shock during maintenance or installation.

	• DO NOT touch live or exposed parts of the input and output sides to avoid electric shock when checking or maintaining the device.
	**CAUTION!** • Handle the Product carefully to prevent falling off due to its weight! • Check the device and make sure there is no problem with the installation before putting it into operation! • Connect the wires to avoid short circuit hazard, to ensure personal safety and the normal operation of the device. • Although the Product is certified to international safety standards, it will become hot during operation. DO NOT touch the hot parts of the device during operation.
	**NOTICE!** • Follow all the wiring and safety instructions of the Product. • All the wiring and operation must conform to the related local standard requirements of the device.
	**IMPORTANT!** • The device nameplate contains important information of the device, such as model, serial number and detailed parameters. • If there is any problem or malfunction of the device during operation, please contact our after-sales center and provide the serial number. Our service personnel can provide timely service for you. • Please keep the nameplate intact.

2 General Introduction

2.1 Appearance and Dimensions

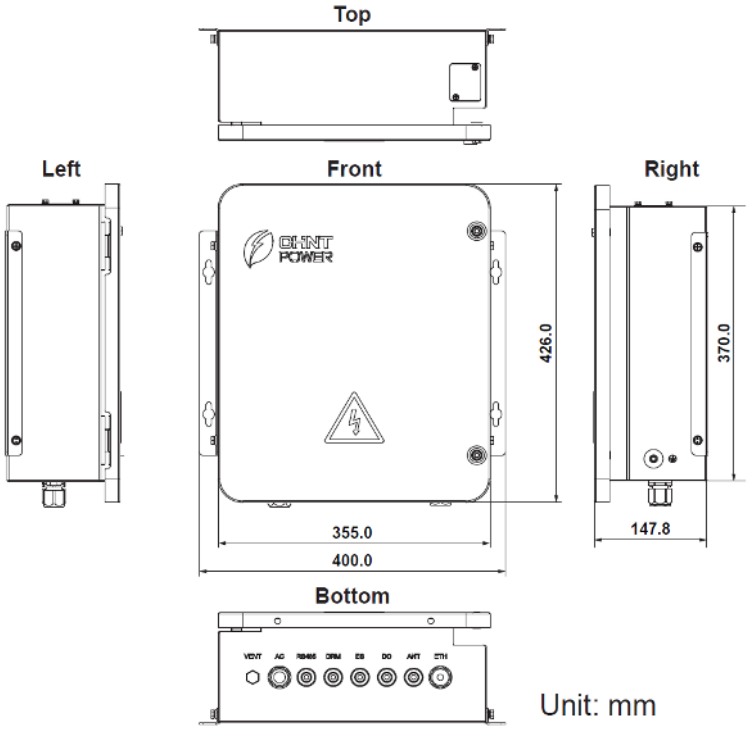

Figure 2-1 Appearance and Dimensions

2.2 Bottom Connections

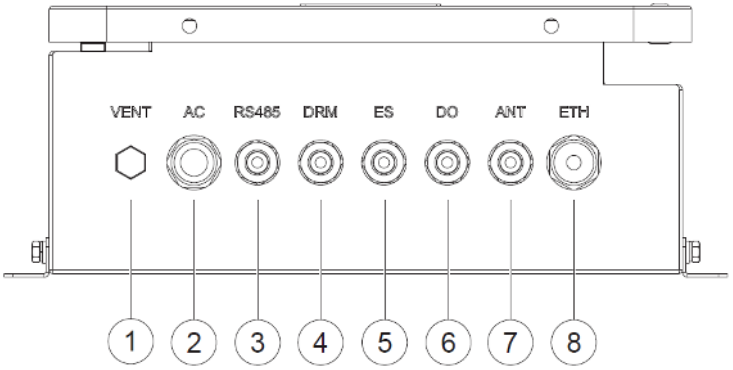

Figure 2-2 Bottom connections of the Smart Power Controller

No.	Terminal	Usage
1	Vent	Balance pressure difference
2	AC	AC cable outlet
3	RS485	RS485 cable outlet
4	DRM	Demand Response Management (DRM) cable outlet
5	ES	Emergency Stop (ES)
6	DO	Digital output (DO) cable outlet
7	ANT	Feeder line outlet for Bluetooth suction cup antenna
8	ETH	Ethernet cable outlet

Table 2-1 Bottom Connections

2.3 Internal Structure

After opening the controller, you can find the following main components as shown below.

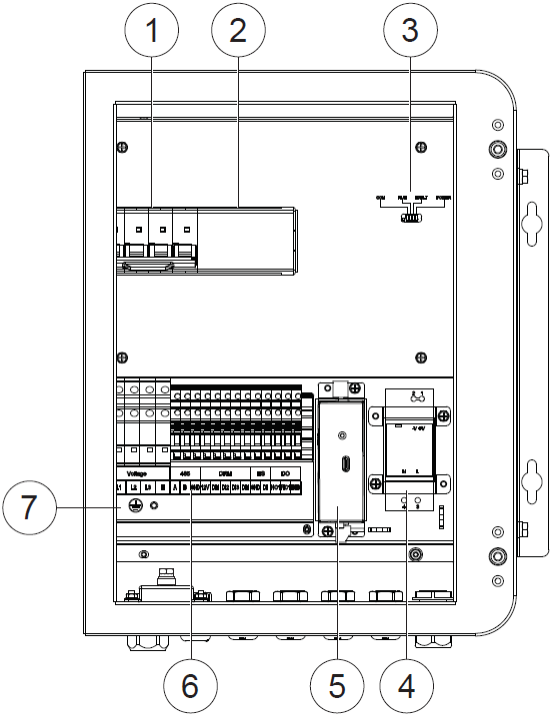

Figure 2-3 Overview of internal structure and nameplate

No.	Component
1	Miniature circuit breaker
2	AC surge protector device (SPD)
3	Dry contact indicator
4	Power supply module
5	Ethernet communication module (with Ethernet card)
6	Terminal block (Interface terminal assembly)
7	Internal grounding point

Table 2-2 Main Components

2.4 System Schematic Diagram

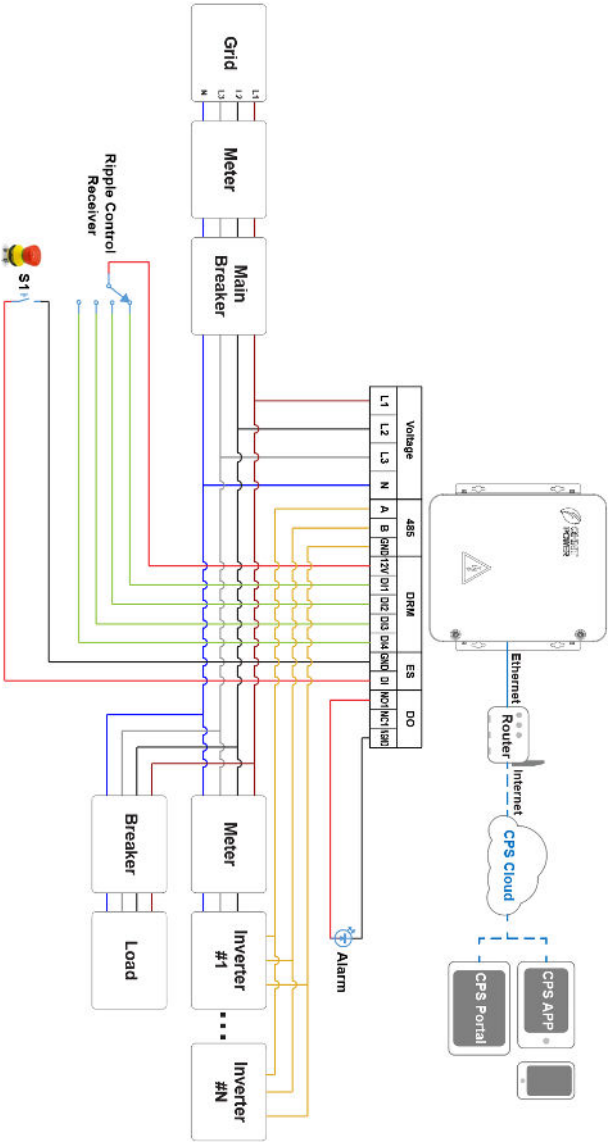

Figure 2-4 System Diagram

3 Mechanical Installation

3.1 Unpacking for Inspection

Check the product for any obvious damages or if the items in the delivery list are complete before performing installation. Contact your supplier immediately if any problem is found. The delivery list is as below:

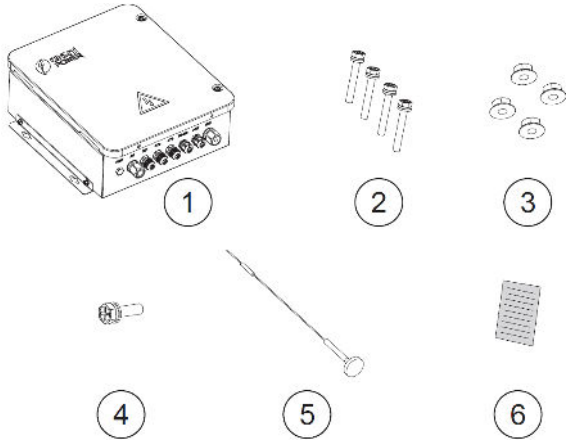

Figure 3-1 Delivery List

No.	Accessories	Type	QTY (pcs)
1	Smart power controller	SAU100N2-DIO-EU	1
2	Combination screw	M6x42	4
3	Flange nut	M6	4
4	Combination screw	M5x12	1
5	Suction cup antenna	YE0016AA	1
6	Quick installation guide	N/A	1

Table 3-1 Delivery list Description

3.2 Installation Requirements

3.2.1 Recommended Clearances

During planning and installing the controller, appropriate clearances as indicated below shall be reserved to facilitate access, maintenance, and to prevent cable strain or physical damage.

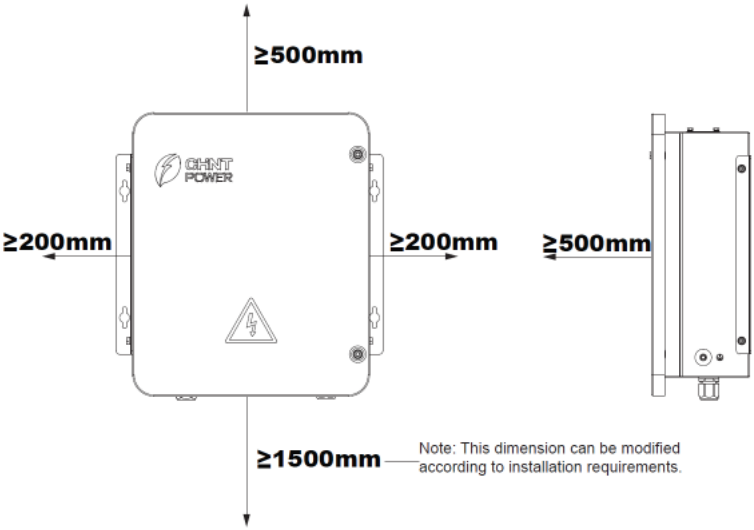

Figure 3-2 Recommended Clearances

3.2.2 Installation Environment Requirements

It is recommended to install the controller under a shelter to avoid direct sunlight, rain and snow accumulation, to prevent from increasing controller failures or reducing its service life.

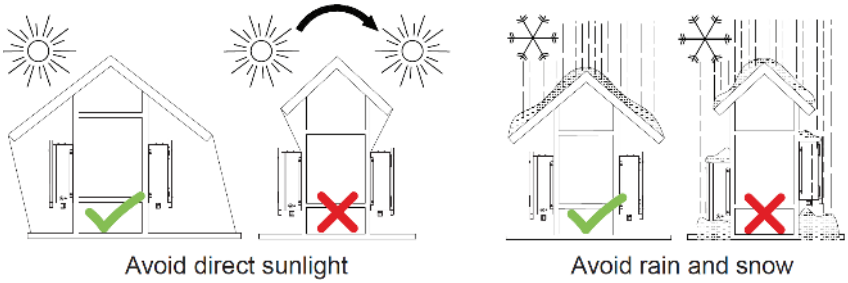

Figure 3-3 Installation Environment Requirements

3.3 Installation Procedures

WARNING!

- All the installation steps should be performed only by qualified technical personnel.

1. Use a marker to mark drilling points for four 8mm diameter holes on the support structure (wall, steel rack, etc.).

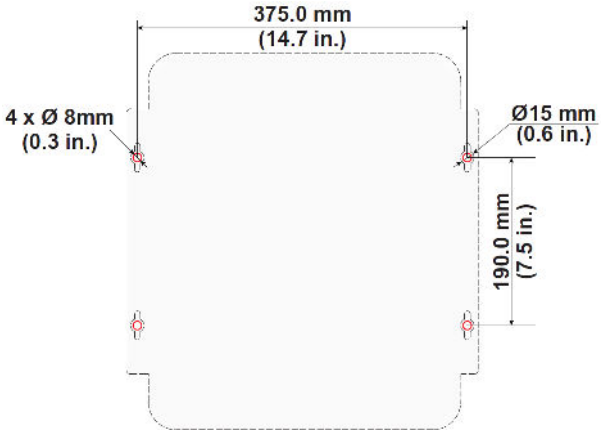

Figure 3-4 Mark Drilling Points

2. Drill four holes at the marked positions. Tool: Electric drill with Φ8.0mm drill bit.

3. Align the four mounting holes on the controller with the four holes on the support structure. Secure the controller using the M6x42 screws and M6 flange nuts, then tighten them firmly. Tool: 10 mm hex socket wrench. Torque: 8.3 - 10 N.m.

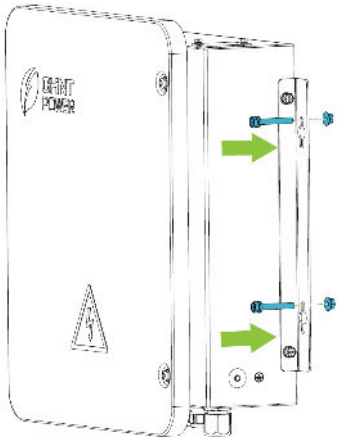

Figure 3-5 Secure the Controller

4 Electrical Connection

WARNING!



- Check all the input and output cables or terminals to ensure there's no voltage before electrical connection to avoid electric shock!
- All the installation steps should be performed only by qualified technical personnel.
- Before wiring, switch off the miniature circuit breaker inside the controller and ensure that all upstream and downstream circuits connected to the controller are completely de-energized.



CAUTION!

Connect the cables following strictly the polarities marked on the device to avoid short circuit hazards.

4.1 Recommended Tools and Usages

Tool	Usage	Torque value
5mm hex socket wrench	Open front cover	N/A
	Secure front cover	3 N·m
PH2 Phillips screwdriver	Fix AC terminal	1.3 N·m
	Fix internal grounding terminal	1.6 N·m
No.10 socket wrench	Fix external grounding terminal	5.9 N·m
#1 flathead screwdriver	Fix CT terminal	0.6 N·m
	Fix RS485 terminal	
Wire stripper	Remove the insulation layer from cable	N/A
Diagonal plier	Cut cable	N/A
Crimping plier	Crimp the terminal and cable	N/A

Table 4-1 Recommended Tools and Usages

4.2 Cable Specification

Cable	Type	Cable Outer Diameter	Cross-Sectional Area (CSA)
AC cable	Outdoor four-core copper wire	6mm ~ 15mm	• L1/L2/L3/N: 4mm^2~10 mm^2 • PE: 1mm^2~6mm^2
	Outdoor single-core copper wire	4mm ~ 6mm	
Grounding cable	Outdoor copper-core wire	6.4mm ~ 7.3mm	6mm^2~10mm^2
RS485 cable	Double-layer insulated cable	4.5mm ~6mm	3x0.2mm^2~0.75 mm^2
DRM cable	Double-layer insulated cable	7mm ~ 10mm	5x0.2mm^2~0.75 mm^2
ES cable	Double-layer insulated cable	4.5mm ~ 6mm	2x0.2mm^2~0.75 mm^2
DO cable	Double-layer insulated cable	4.5mm ~ 6mm	3x0.2mm^2~0.75 mm^2

4.3 Electrical Connection

IMPORTANT!

Before wiring, switch off the miniature circuit breaker inside the controller and ensure that all upstream and downstream circuits connected to the controller are completely de-energized.

4.3.1 Wiring Overview of Smart Power Controller

The controller's internal wiring is factory-installed before shipment. Field installation only requires terminating wires to the terminal blocks based on the wiring labels. The following figure provides an overview of the terminal block wiring.

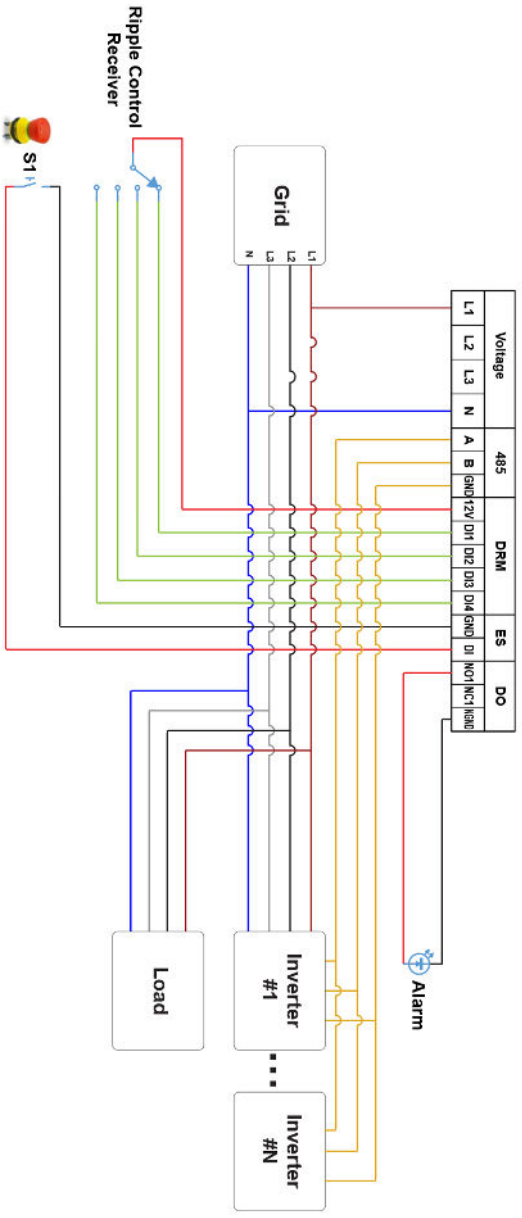

Figure 4-1 Terminal Wiring of Smart Power Controller

4.3.2 Open Front Cover

1. Loosen the two screws to open the front cover.

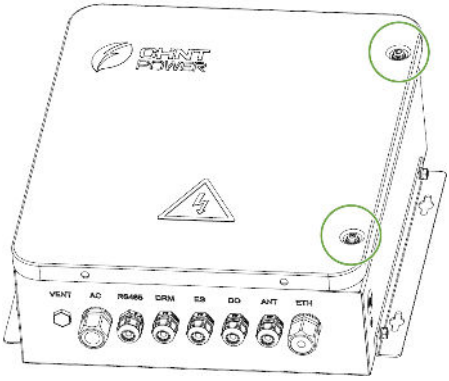

Figure 4-2 Open the Front Cover

2. Use the support rod to hold the front cover, ensuring it is firmly snapped into the slot.

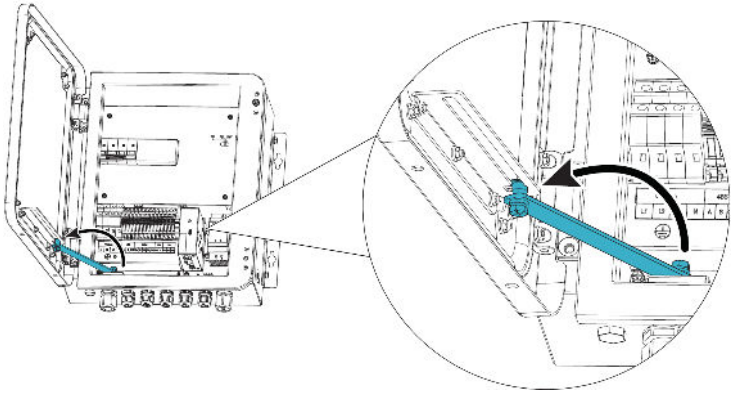

Figure 4-3 Hold the Front Cover

4.3.3 Grounding (Protection Earthing)

The grounding cable must be connected using at least one of the following methods:

- **Internal Grounding**: Connect grounding cable to the grounding hole located at the lower-left inside the controller using the pre-installed M4x10 screw.

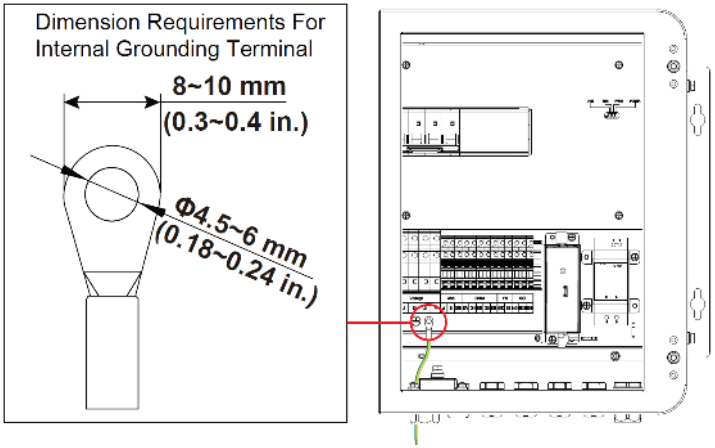

Figure 4-4 Internal Grounding

- **External Grounding**: Connect grounding cable to the grounding hole is located in the lower-right corner outside the controller using the M5x12 screw.

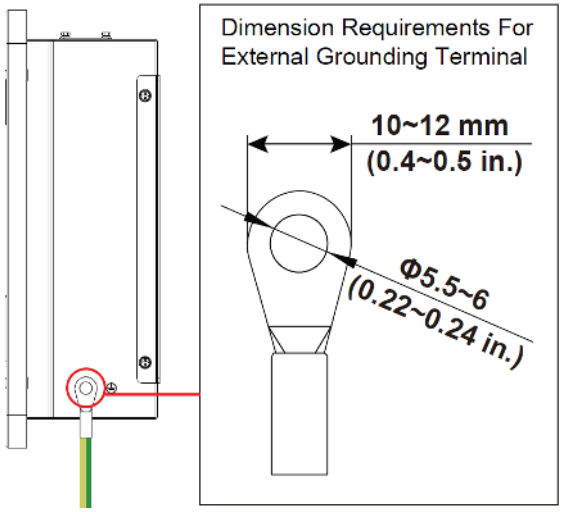

Figure 4-5 External Grounding

Note: After wiring, the external PE point needs to be coated with glue or paint. Other sizes of grounding cables that meet local standards and safety regulations can also be used for grounding connections. But CHINT shall not be liable for any damage caused.

4.3.4 AC Cable Wiring

1. Strip the jacket and insulation layer of the AC cable to the appropriate length, exposing the conductors. Insert the conductors into the tube terminals until contacting the terminal's barrel end, align the cable insulation edge with the terminal's crimping wings, then crimp firmly to secure the connection.
   Note: The tube terminals are customer-supplied, compatible model is E6010.

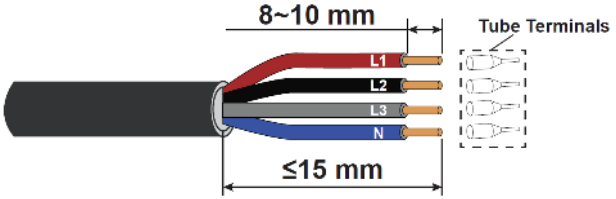

Figure 4-6 Crimp the AC Terminals

2. Loosen the locking nut of AC cable gland, and thread the crimped AC cable through the AC outlet. Insert the phase lines (L1/L2/L3) and neutral line (N) into the corresponding terminals. Tighten the terminal screws. Finally, re-tighten the gland nut.

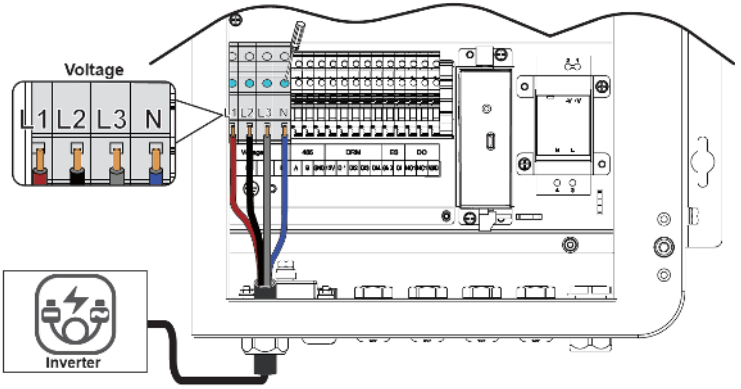

Figure 4-7 Connect the AC Cable

4.3.5 RS485 Cable Wiring

1. Strip the jacket and insulation layer of the RS485 cable to the appropriate length, exposing the conductors. Insert the conductors into the tube terminals until contacting the terminal's barrel end, align the cable insulation edge with the terminal's crimping wings, then crimp firmly to secure the connection.
   Note: The tube terminals are customer-supplied, compatible models are E0206~E0506.

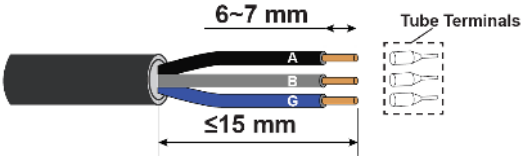

Figure 4-8 Crimp the RS485 cable

2. Loosen the locking nut of RS485, and thread the crimped RS485 cable through the RS485 cable outlet. Insert the RS485 wires into the corresponding terminals and tighten the terminal screws. Finally, re-tighten the gland nuts.

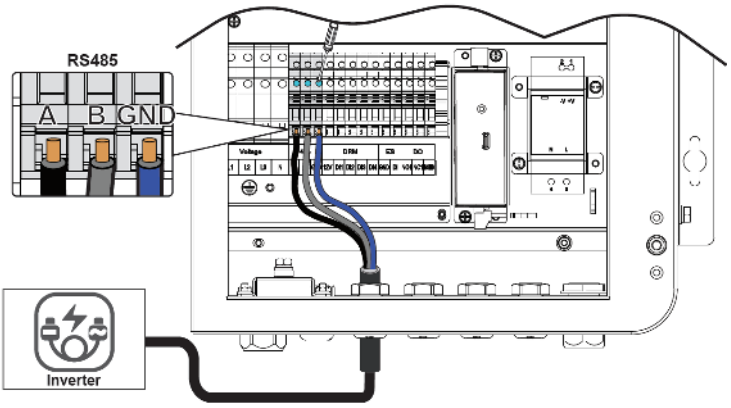

Figure 4-9 Connect the RS485 Cable

4.3.6 DRM Cable Wiring

Refer to 4.3.5 RS485 Cable Wiring for wire stripping and crimping. Loosen the locking nut of the DRM gland, and thread the crimped DRM cable through the DRM cable outlet. Insert the DRM wires into the corresponding terminals. Tighten the terminal screws. Finally, re-tighten the gland nut.

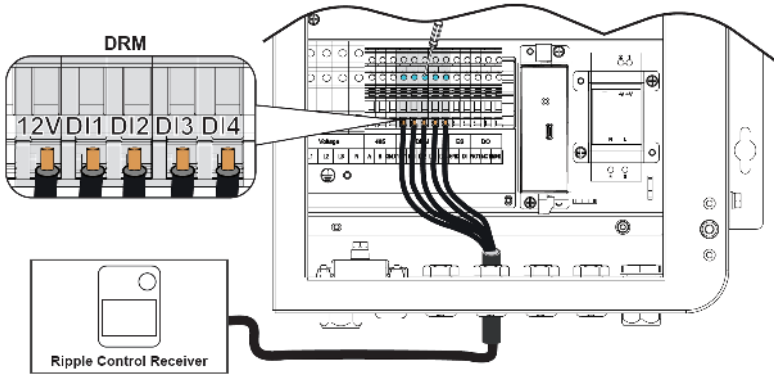

Figure 4-10 Connect the DRM Cable

4.3.7 ES Cable Wiring

Refer to 4.3.5 RS485 Cable Wiring for wire stripping and crimping. Loosen the locking nut of the ES gland, and thread the crimped ES cable through the ES cable outlet. Insert the ES wires into the corresponding terminals. Tighten the terminal screws. Finally, re-tighten the gland nut.

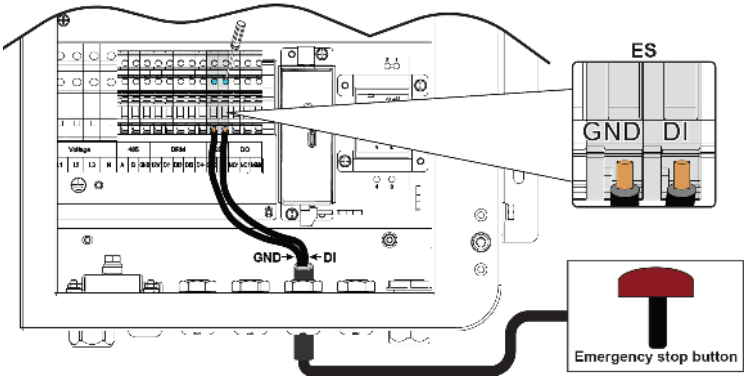

Figure 4-11 Connect the ES Cable

4.3.8 DO Cable Wiring

Refer to 4.3.5 RS485 Cable Wiring for wire stripping and crimping. Loosen the locking nut of the DO gland, and thread the crimped DO cable through the DO cable outlet. Insert the DO wires into the corresponding terminals. Tighten the terminal screws. Finally, re-tighten the gland nut.

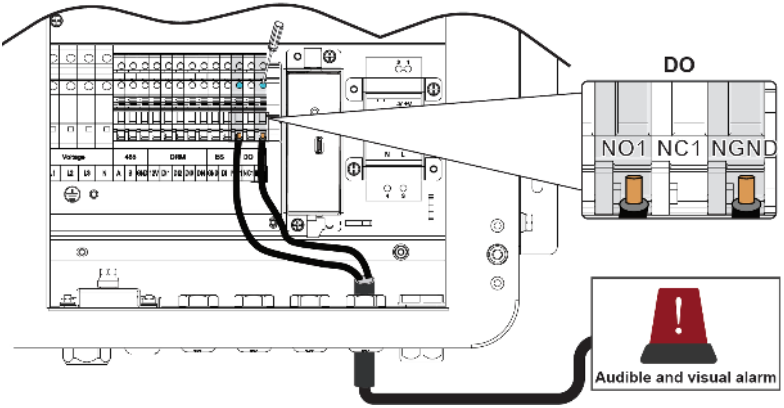

Figure 4-12 Connect the DO Cable

4.3.9 Install Suction Cup Antenna

The communication module inside the controller supports both wired (via Ethernet cable) and wireless (via Bluetooth) communication.

To enable Bluetooth operation:

1. Thread the Bluetooth cable through the ANT hole, then use hand to secure the mounting nut to the module's Bluetooth antenna terminal.

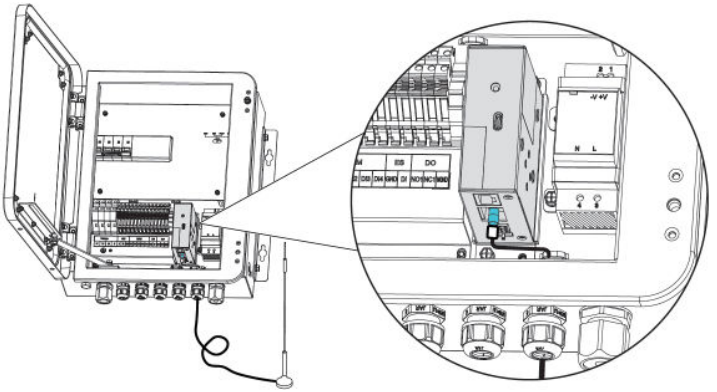

Figure 4-13 Connect the Bluetooth Cable

2. Attach the antenna's magnetic base to the surface on the controller top.

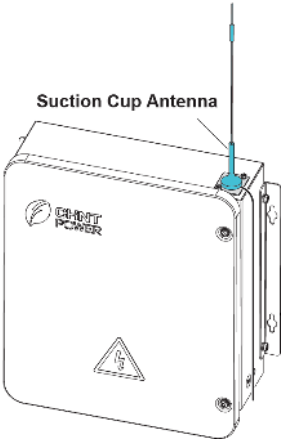

Figure 4-14 Attach the Suction Cup Antenna

IMPORTANT!

After completing all wiring steps, secure the front cover by tightening all screws to prevent water ingress. Ensure that all waterproof terminals are firmly fastened, and seal any gaps at the bottom of the terminals with firestop putty.

5 Dry Contact Indicator

The following diagram shows the controller's dry contact indicator:

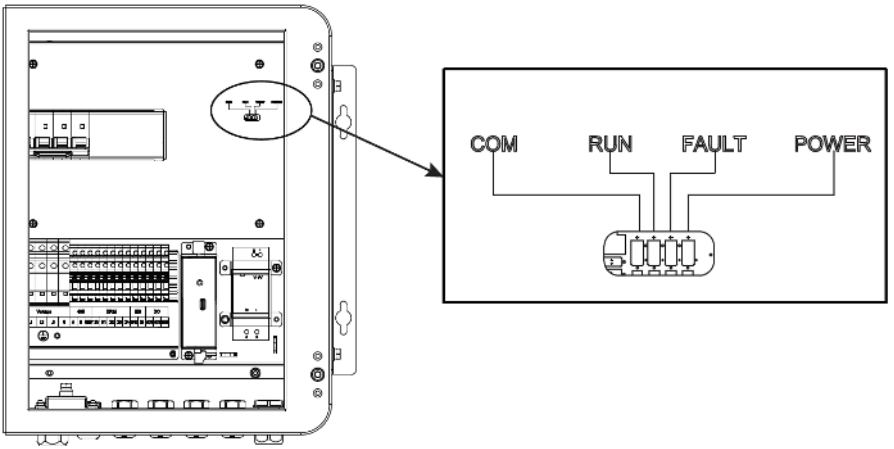

Figure 5-1 Dry Contact Indicator

The indicators and their descriptions are provided in the following table.

Indicator	Name	Status	Indication
COM	Communication Indicator	On (Green)	No communication
		Off	
		Flash	Data is being transmitted
RUN	Operation Indicator	On	Software is running in BOOT
		Flash (Green, 1s interval)	Software is running in App
		Off	Software is not running
Fault	Reserved		
Power	Power Indicator	On (Green)	Controller is powered
		Off	Controller is not powered

Table 5-1 Dry Contact Indicators Description

6 Dry Contact Function Configuration

CAUTION!

- The product can only be put into service after the installation and inspection is completed!

Dry contact parameters can be configured through the MatriCloud platform's mobile application or web interface.

- For configuration via app, refer to Section 6.1 Dry Contact Configuration via App.
- For dry contact configuration via Web interface, refer to Section 6.2 Dry Contact Configuration via Web Interface.

6.1 Dry Contact Configuration via App

6.1.1 Download App

Download Matricloud App in the Apple store or Google store, or scan the QR code (Supports Android 7.0 and iOS 13.0 or later).

Figure 6-1 Download MatriCloud

6.1.2 Configure Gateway and Dry Contact Function

Use the App local connection mode to configure the anti-reflux parameters of gateway (communication module).

1. Enable the Bluetooth function of your mobile device, then open the MatriCloud App. (No account or password is needed)
2. Click **Device Access**.

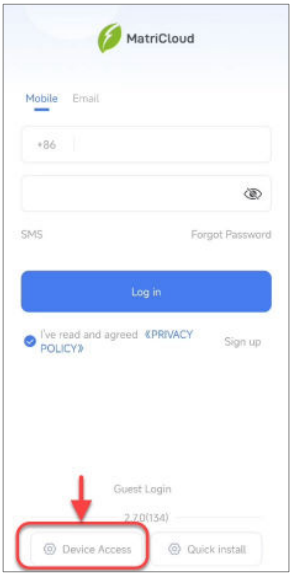

Figure 6-2 Click Device Access

3. Click **Bluetooth Connect**.

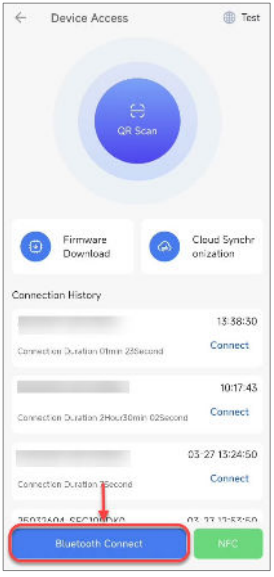

Figure 6-3 Click Blutooth connect

4. Locate the corresponding device using the last 8 digits of the Ethernet communication module's serial number. Then, swipe left to open the terminal settings interface.

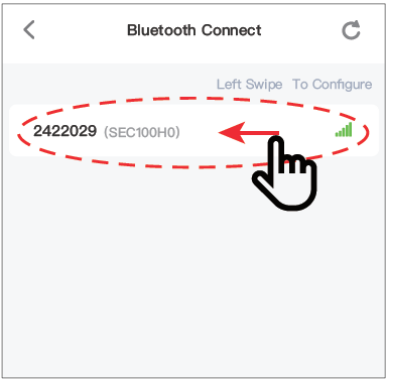

Figure 6-4 Select a device to connect

5. Click **Basic Configuration**. (If password needed, enter 1111).

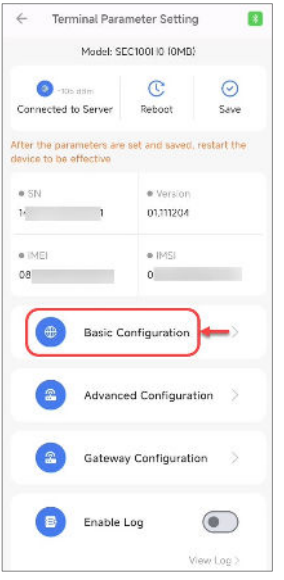

Figure 6-5 Click Basic Configuration

6. Click Modify to modify the protocol.

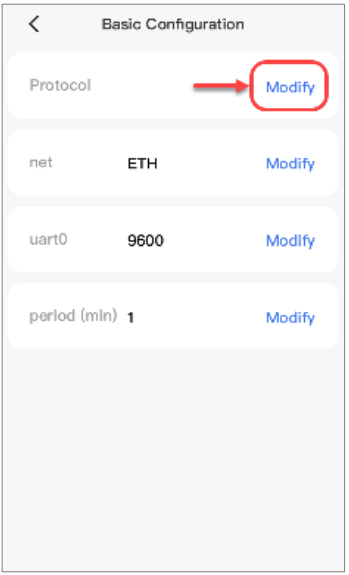

Figure 6-6 Modify Protocol

7. Set ID Address according to the inverter installation quantity. Then, click **Save**.

   Note: Please select the appropriate inverter protocol. If uncertain, contact technical support.

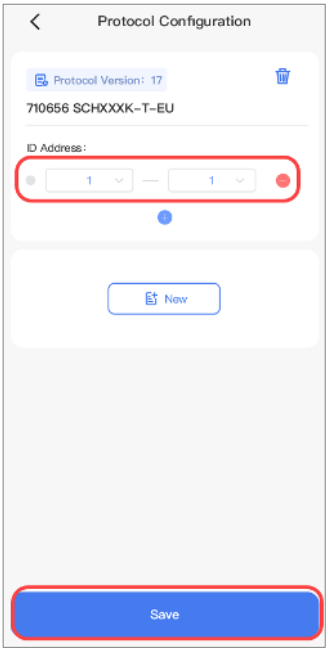

Figure 6-7 Set ID Address

8. Configure the network connection mode.

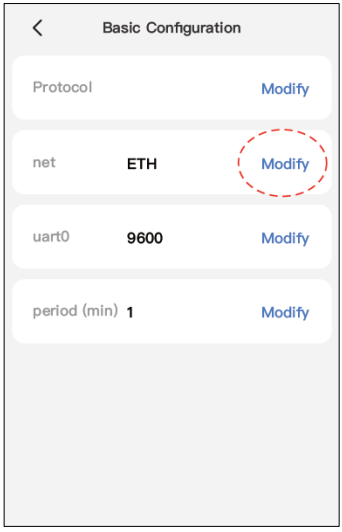

Figure 6-8 Set Network Connection Mode

9. Back to the terminal parameters setting interface. Click **Gateway Configuration**.

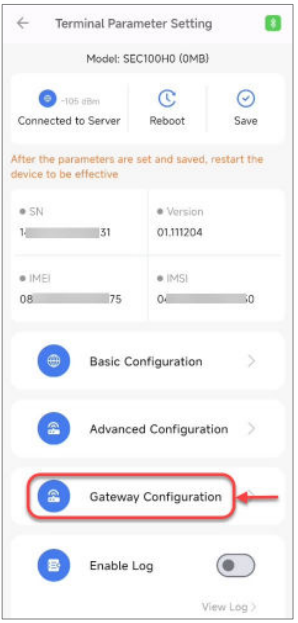

Figure 6-9 Click Gateway Configuration

10. Click the **Forwarding Serial Port** tab to open the configuration interface, configure the relevant parameters, and then click **Completed**.

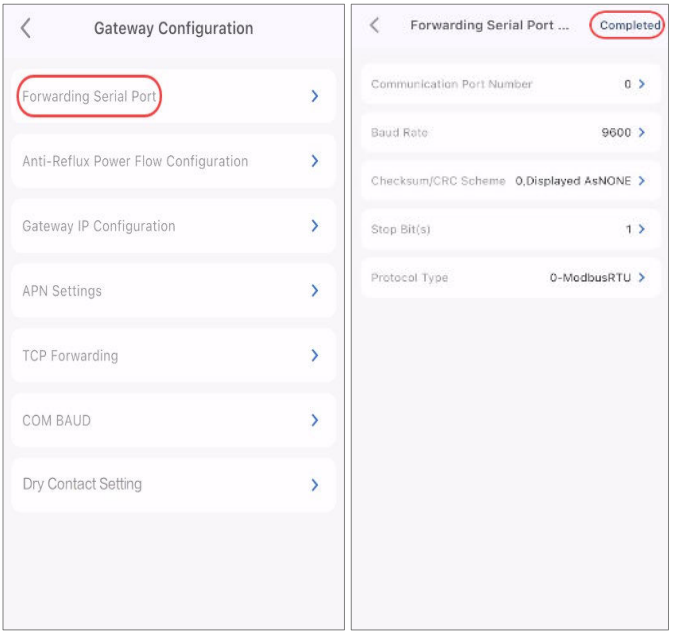

Figure 6-10 Configure Forwarding Serial Port

11. Click **Anti-Reflux Power Flow Configuration** tab, disable the anti-reflux power flow function. Then, click **Completed.**

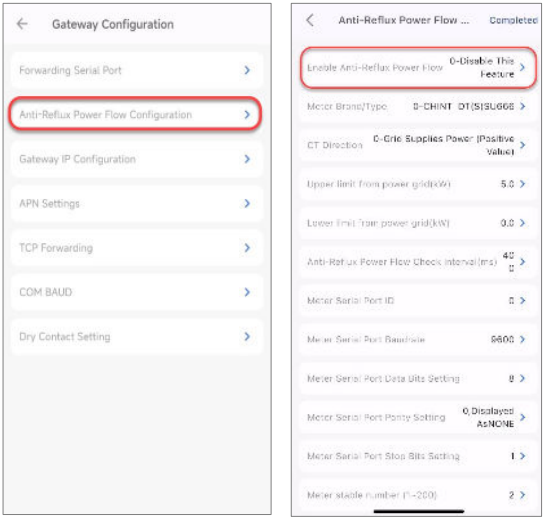

Figure 6-11 Click anti-reflux power flow configuration

12. Configure **COM Baud** tab to open the com interface, configure COM and baud rate. Then, click **Confirm**.

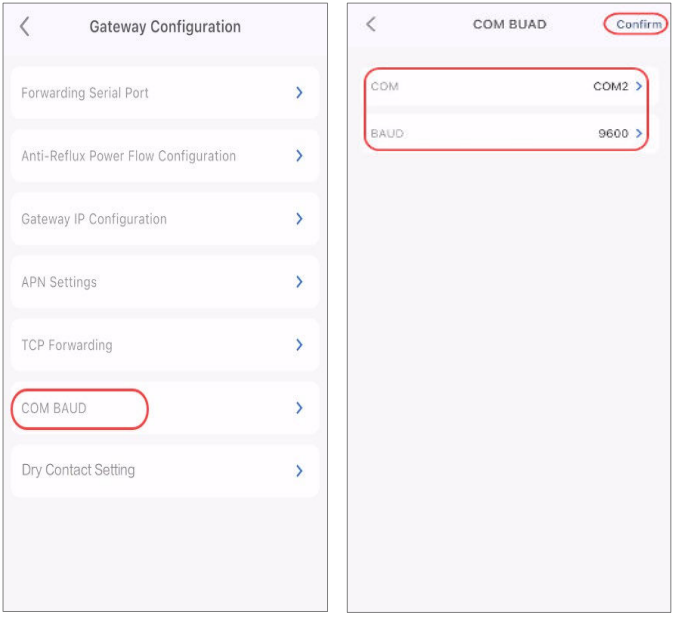

Figure 6-12 Configure gateway IP

13. Click **Dry Contact Setting** tab to open the setting interface, enable the dry contact control function. Then, click **Confirm**.

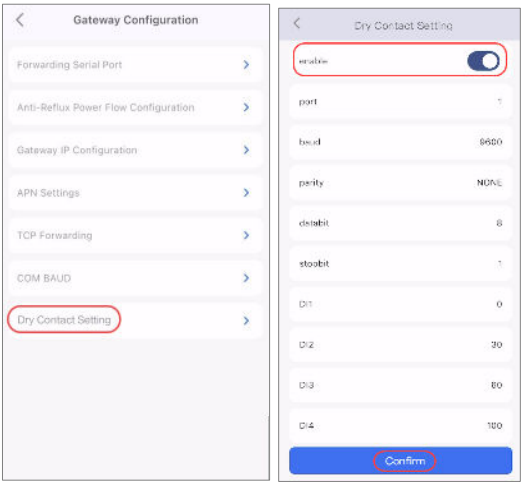

Figure 6-13 Configure Dry Contact Setting

14. After completing the parameter settings, return to **Terminal Parameter Setting**. Click **Save** to save the changes, then click **Reboot** to restart the Ethernet card.

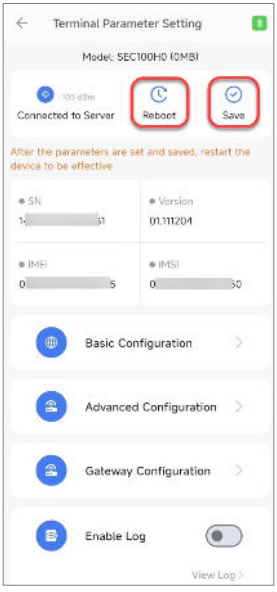

Figure 6-14 Save and Reboot

6.2 Dry Contact Function Configuration via Web Interface

Follow these steps to configure the dry contact function via web interface.

6.2.1 Log into Web Platform

1. Log in to the MatriCloud platform using registered account and password.
   - For Asia-Pacific: Go to https://icloud.chintpower.com.
   - For Europe: Go to https://eu.chintpower.com.
   - For North American: Go to https://icloud.chintpowersystems.com.

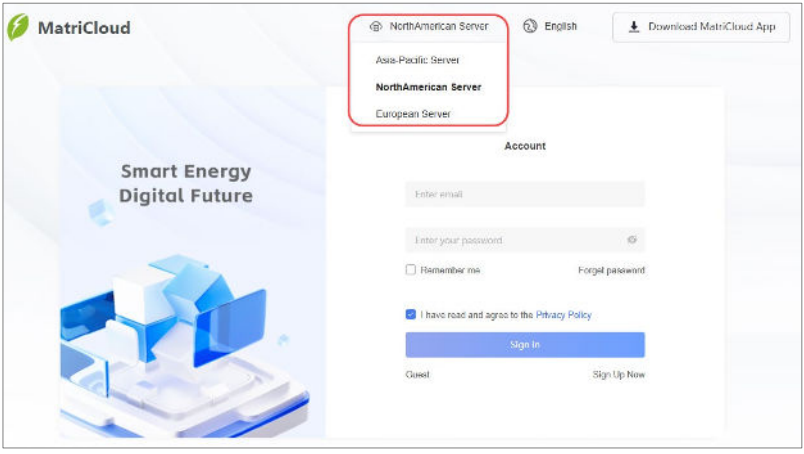

Figure 6-15 Log in to MatriCloud Web

6.2.2 Configure Gateway and Dry Contact Function

Follow the steps below to configure the gateway and dry contact function:

1. Click the search bar, enter the serial number (SN) of the communication module inside the controller. Select the target gateway from the results list to open its details page.

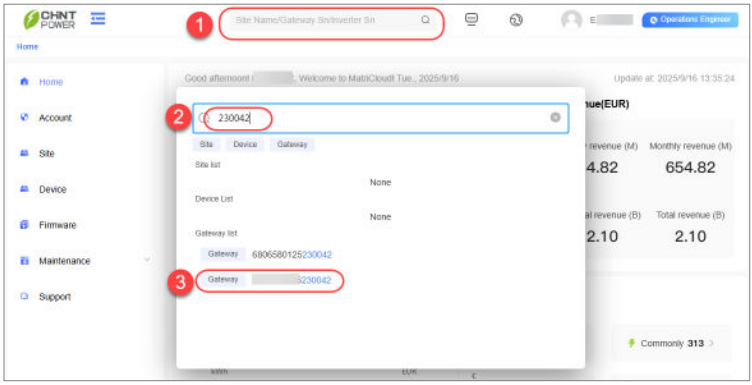

Figure 6-16 Search for the Target Gateway

2. Click the **Setting** tab on the gateway details page.



Figure 6-17 Click Setting tab of the Gateway Details

3. Configure **Protocol**: Click Protocol, select the protocol, configure **Modbus Address**, click **Submit**.
   Note: Please select the appropriate inverter protocol. If uncertain, contact technical support.

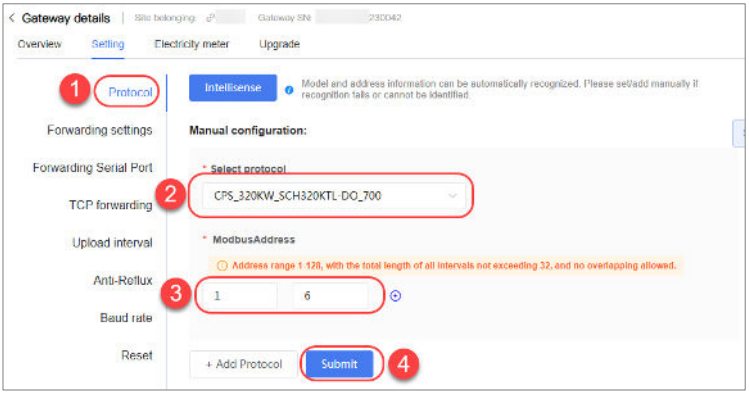

Figure 6-18 Configure Protocol of the Gateway

4. Configure Forwarding Serial Port**:** Click **Forwarding Serial Port**, configure the serial port, then submit the configuration.

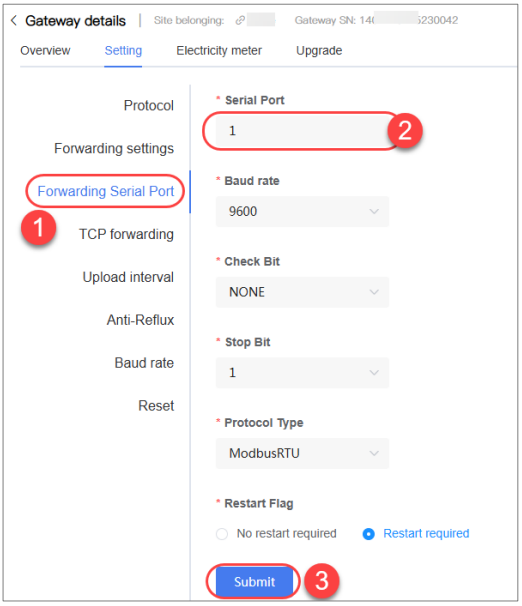

Figure 6-19 Configure Forwarding Serial Port of the Gateway

5. Configure Baud Rate: Click **Baud Rate**, configure the related parameters, then submit the configuration.

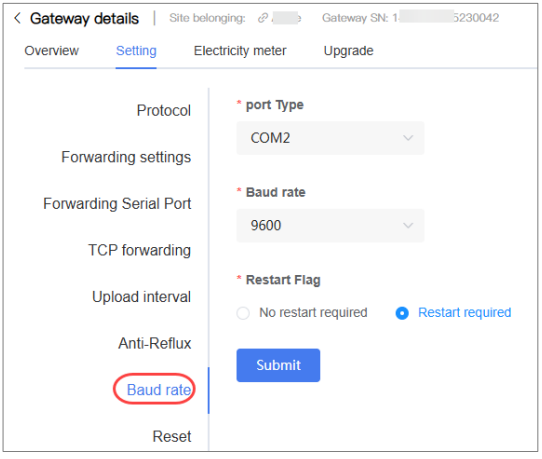

Figure 6-20 Configure Baud Rate of the Gateway

6. Disable the Anti-Reflux function.

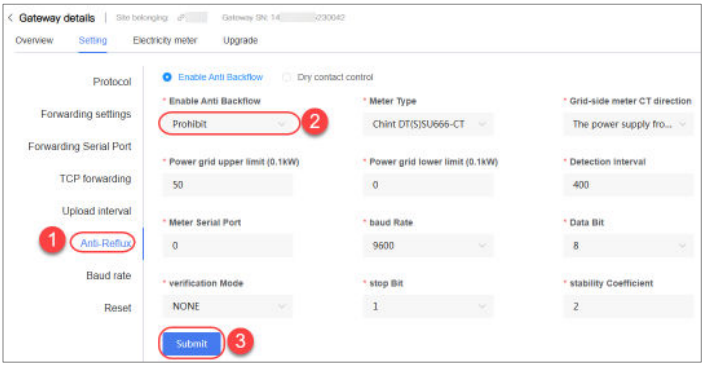

Figure 6-21 Disable the Anti-Reflux Function

7. Configure Dry contact control function: Click **Anti-Reflux** > **Dry contract control**.

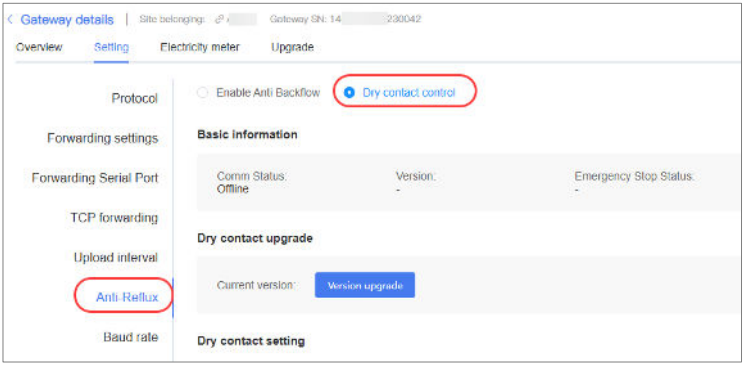

Figure 6-22 Locate Dry Contact Control Function

8. Enable the dry contact control function, configure the related parameters. Then, submit the configuration.

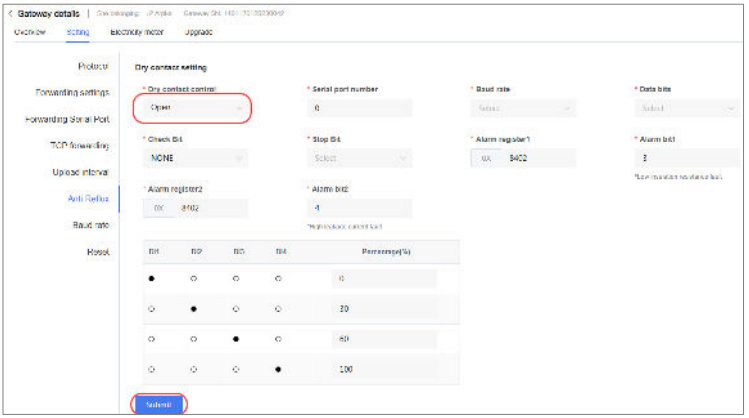

Figure 6-23 Configure the Parameters of Dry Contact Control

7 Maintenance

IMPORTANT!

Only qualified and authorized personnel may perform maintenance and other operations on the Smart Communication Box.

7.1 Regular Maintenance

To keep the device working normally for a long time, it is necessary to check its working status regularly. Regular maintenance items are as follows:

- Ensure that no strong electromagnetic interference devices are placed near the controller.
- Ensure that no heat sources are placed near the controller.
- Regularly wipe away dirt.
- Periodically check for signs of loose cable connections.

7.2 Troubleshooting

This section provides a quick-reference list of common fault symptoms, their potential causes, and recommended solutions for the anti-reflux function. The table below outlines typical fault scenarios, their observable symptoms, and recommended corrective actions.

If a problem occurs, please refer to this table as the first step in identifying the potential cause and implementing the corresponding solution. For issues not covered in this guide or if the proposed solution does not resolve the problem, please contact our technical support team.

Fault Description	Symptoms	Possible Cause or Solution
No voltage at the output of the power module	Power indicator on the power module remains off	1. Check whether the input terminals of the power module are loose or disconnected; if so, re-tighten them. 2. Use a multimeter in resistance mode to check whether the circuit at the front side of the power module input is open; if open, troubleshoot and restore connectivity. 3. Use a multimeter in resistance mode to check whether the output of the power module is shorted; if shorted, eliminate the downstream

		fault. 4. Verify whether the power module is damaged; if damaged, replace the module. 5. If the issue persists, contact after-sales technical support.
Dry contact board is not powered	POWER indicator on the dry contact board does not light up (remains off)	1. Check whether the input terminals of the dry contact board are loose or disconnected; if so, re-tighten them. 2. Check whether the output terminals of the power module are loose or disconnected; if so, re-tighten them. 3. Check the wiring between the dry contact board input and the power module for open circuits; if found, troubleshoot and restore connectivity. 4. Use a multimeter in DC voltage mode to test whether the power module has output voltage; if no output is detected, follow the power module troubleshooting procedure. 5. If the issue persists, contact after-sales technical support.
No communication between the dry contact board and the network card	COM indicator on the dry contact board remains off or on continuously	1. Check whether the wiring between the dry contact board and the network card is loose or disconnected; if so, re-tighten it. 2. Check whether the serial port number and baud rate between the dry contact board and the network card are set correctly; if not, reconfigure them. 3. If the issue persists, contact after-sales technical support.
Dry contact board program is not running	RUN indicator on the dry contact board remains off or on continuously	Contact after-sales technical support.
Bluetooth cannot connect	Unable to detect the network card's Bluetooth signal	1. Check whether the network card is properly powered. 2. Check whether the indicator lights

		on the network card are on. 3. Check whether the correct server is selected. 4. Check whether the Bluetooth antenna is properly connected. 5. If the issue persists, contact after-sales technical support.

Table 7-1 Troubleshooting Quick Reference List

8 Technical Data

Model	SAU100JN2-DIO-EU
Communication	
Max. Inverters Connected	10
RS485 Interface	1
Ethernet Interface	1 × RJ45, 10 / 100 Mbps
Digital Input / Output	DI × 4, DO × 1, ES_DI × 1
Configuration	
Datalogger	Smart Ethernet Card x1
Nominal Voltage	230 / 400 Vac, 50 / 60 Hz
Mechanical	
Dimensions (W x H x D)	400 × 426 ×147.8 mm
Weight	7 kg
Installation Method	Wall mounting / Bracket mounting
Environment	
Operating Temperature Range	-30℃ ~ + 60℃
Storage Temperature Range	-40℃ ~ + 85℃
Working Humidity	5%-95% (No Condensation)
Max. Operating Altitude	2000 m
Ingress Protection Rating	IP66

Table 8-1 Technical Data

Contact Information

Please do not hesitate to contact us if you have any questions regarding this product. We are glad to provide the best service for you.

Shanghai Chint Power System Co., Ltd.

Headquarters: No. 5999, Guangfulin Road, Songjiang District, Shanghai, P. R. China

Switchboard: +86-021-37791222

Fax: +86-021-37791222-6001

Website: www.chintpower.com

Service Hotline: 021-37791222-6300

Email: service.cps@chint.com