SOLAR ELECTRIC

KOSTAL

PIKO CI

Solar Inverter 30/50 G2



Data sheet

PIKO CI G2: The best choice for your project



Smart Performance

- Maximum energy yield thanks to high certified efficiency
- The connected PV strings are monitored in pairs for optimum monitoring and service
- Integrated, certified grid service functions ensure reliable operation

Smart Project Design

- Optimised generator design with system voltage of up to 1100 V
- Integrated KOSTAL Smart AC Switch takes the place of the external circuit breaker
- Simple DC installation at an attractive cost without any string distribution boxes
- Generator is disconnected on site by integrated DC voltage separator
- Over-assignment of up to 50% (DC to AC) permits flexible generator design

Smart Connected

- Simple communication (daisy chain) via dual LAN interface (RJ45) with integrated switch
- Tried and tested communication via RS485 bus integrated as standard
- Compatible with many plant controllers and data loggers, so you can use the monitoring system you prefer
- Trouble-free use in direct marketing thanks integrated feed management
- Integrated data loggers back system information up at all times

Smart Installation

- Optimum protection from dust and water for tough outdoor use (protection class IP66)
- Protection against overvoltage on the AC and DC side type 2 (modules exchangeable)
- DC arc detection (AFCI)
- Cost-optimised 4-wire AC connection, neutral wire not applicable in symmetrical grids

PIKO CI G2: Technische Daten

	PIKO CI G2		30	50
Input side (DC)	Max. PV power (cos φ = 1)	kWp	45	75
	Nominal DC power	kW	30	50
	Rated input voltage ($U_{DC,r}$)	V	620	620
	Start-up input voltage ($U_{DCstart}$)	V	200	200
	Max system voltage (U_{DCmax})	V	1100	1100
	MPP range at rated output ($U_{MPP,min}$)	V	420	500
	MPP range at rated output ($U_{MPP,max}$)	V	850	850
	Working voltage range ($U_{DC,workmin}$)	V	180	180
	Working voltage range ($U_{DC,workmax}$) [4]	V	1000	1000
	Max. input current ($I_{DC,max}$) per MPPT [3]	A	104 MPPT 1: 40 MPPT 2: 32 MPPT 3: 32	136 MPPT 1: 40 MPPT 2: 32 MPPT 3: 32 MPPT 4: 32
	Max. DC short-circuit current (I_{SC_PV})	A	140 MPPT 1: 50 MPPT 2: 45 MPPT 3: 45	185 MPPT 1: 50 MPPT 2: 45 MPPT 3: 45 MPPT 4: 45
	Max. DC current per DC terminal ($I_{Stringmax}$)	A	20	20
	Internal DC string fuses	A	--	--
	Number of DC inputs		6	8
	Number of independent MPP trackers		3	4
Output side (AC)	Rated power, cos φ = 1 ($P_{AC,r}$)	kW	30	50
	Apparent output power ($S_{AC,nom}$ / $S_{AC,max}$)	kVA	33,4 / 33,4	55,6 / 55,6
	Min. output voltage ($U_{AC,min}$)	V	322	322
	Max. output voltage ($U_{AC,max}$)	V	520	520
	Rated AC current ($I_{AC,r}$)	A	43,5	72,5
	Max. output current ($I_{AC,max}$)	A	51	84,3
	Short-circuit current (RMS)	A	43,5	72,5
	Grid connection		3N~, 230/400 V, 50 Hz	
	Rated frequency (f_r)	Hz	50	
	Grid frequency (f_{min}/f_{max})	Hz	45/55	
	Setting range of the power factor (cos $\varphi_{AC,r}$)		0,8…1…0,8	
	Power factor for rated power (cos $\varphi_{AC,r}$)		1	
	Max. THD	%	<3	
	Standby (night-time consumption)	W	<10	
η	Max. efficiency	%	98,2	98,2
	European efficiency	%	97,8	97,8
	MPP adjustment efficiency	%	99,9	99,9

	PIKO CI G2		30	50
System data	Topology: Without galvanic isolation – transformerless		✓	
	Protection class in accordance with EN 60529		IP 66	
	Protective class in accordance with EN 62109-1		I	
	Overvoltage category in accordance with IEC 60664-1, input side (PV generator)		II	
	Overvoltage category in accordance with IEC 60664-1, output side (grid connection)		III	
	DC/AC overvoltage protection		Typ 2 (exchangeable)	
	Degree of contamination		4	
	Environmental category (outdoor installation)		✓	
	Environmental category (indoor installation)		✓	
	UV resistance		✓	
	AC cable diameter (min-max)	mm	25...31	32...38
	AC cable cross-section (min-max)	mm^2	16...35	35...50
	DC cable cross-section (min-max)	mm^2	4...6	
	Max. fuse protection on output side		B63 / C63	B125 / C125
	Internal operator protection in accordance with EN 62109-2		RCMU/RCCB Typ B	
	Automatic switching device integrated in accordance with VDE V 0126-1-1		✓	
	Height/width/depth	mm	530 (707)/635/224	530 (707)/635/224
	Weight	kg	33.1	44.3
	Cooling principle – regulated fans		--	✓
	Max. air throughput	m^3/h	--	152
	Typical noise emission	dB(A)	<35	<50
	Ambient temperature	°C	-25…60	
	Max. installation altitude above sea level	m	4000	
	Relative humidity	%	0…100	
	Connection technology, DC side		Amphenol plug H4	
	Connection technology, AC side (bolt)		M8	M8
Interfaces	Ethernet LAN TCP/IP (RJ45)		2	
	WiFi		✓	
	RS485		2	
	Digital inputs		4	
	Bluetooth		✓	
	Warranty (Smart Warranty[1])	Years	5	
	Warranty extension [2]	Years	5	
	Directives/Certification [3]		IEC 62109-1, IEC 62109-2, VDE-AR-N 4105, VDE-AR-N 4110, TOR Erzeuger Typ A, TOR Erzeuger Typ B, NA/EEA-NE7–CH2020, NA/EEA-NE7–CH2020, CEI 0-16, CEI 0-21, NTS631, UNE 217001 IN, UNE 217002 IN, EN 50549-1, EN 50549-2, IEC 61727/IEC62116, VFR-2019, UTE C15-712-1, IRR-DCC-MV, C10/11, DANSK ENERGI	

Subject to technical changes. Errors excepted. You can find current information at www.kostal-solar-electric.com.

[1] Activate your free warranty (Smart Warranty) now in the KOSTAL Solar online shop (shop.kostal-solar-electric.com). For Smart Warranty Plus, you must also register your device in our KOSTAL Solar portal. This does not affect your statutory warranty. You will find more information about the service and warranty conditions in the download area for your product.

[2] Warranty extention: can be purchased for a fee from the KOSTAL Solar webshop (www.shop.kostal-solar-electric.com)

[3] Information on available Directive/parameter sets can be found in the product download area in the document 'Initial commissioning - Country setting'.Directive EN50438, EN50549-1: does not apply to all national annexes

PIKO CI G2: Compact and quickly ready for use

PIKO CI 30 G2

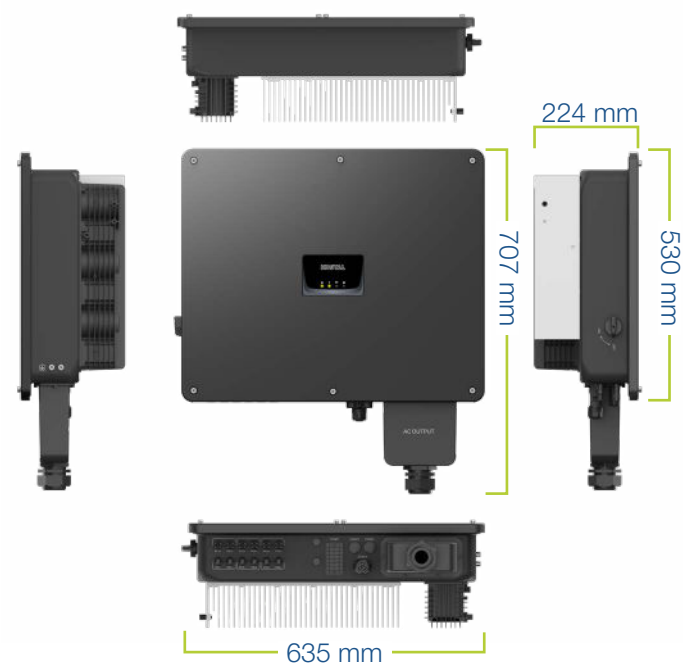

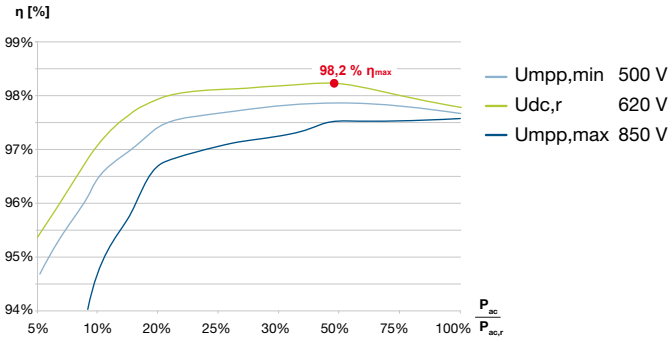

PIKO CI 50 G2

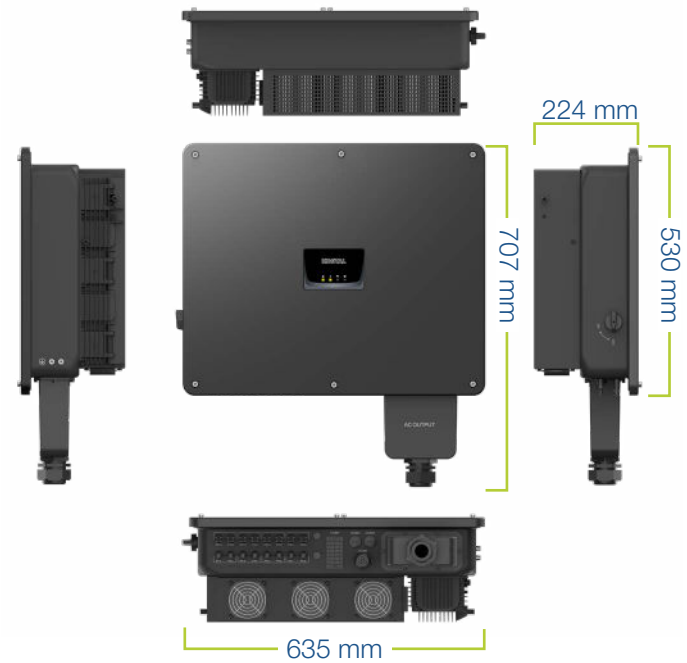

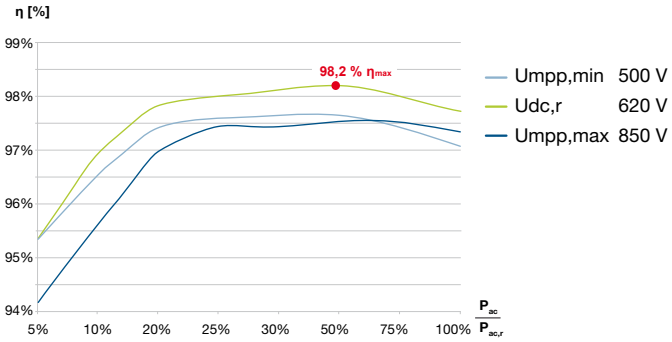

Services for our products

Activation of the KOSTAL Smart Warranty via shop.kostal-solar-electric.com
You can find all further information at www.kostal-solar-electric.com

www.kostal-solar-electric.com

06/2025 - EN - DOC03594654 - TSubject to technical changes, errors excepted.
You can find current information at www.kostal-solar-electric.com.