MULTICLUSTER-BOXES FOR SUNNY ISLAND

MC-BOX-6.3-11 / MC-BOX-36.3-11 / MC-BOX-12.3-20 / GRID-BOX-12.3-20



Flexible
- Capacities from 20 kW to 300 kW
- For stand-alone grids and battery-backup systems*

Simple
- Integrated AC distribution for Sunny Island, generator, PV
- Integrated load-shedding contactor

Safe
- Automatic bypass for the generator
- Active anti-islanding
- Reverse current monitoring

Robust
- High protection classes
- 5-year SMA warranty

Multicluster-Boxes for SUNNY ISLAND

Easy setup of powerful off-grid systems

With the SMA Multicluster-Boxes for Sunny Island battery inverters, both off-grid systems and battery-backup systems* can be configured easily and cost-efficiently. In regions without grid access, based on proven technology, powerful off-grid and hybrid systems with 2 to 12 three-phase clusters, each consisting of 3 Sunny Island inverters of up to 360 kilowatts of output capacity can be installed.
For systems connected to the utility grid, battery-backup systems* with up to 138 kWp can be set up. To simplify installation, all Multicluster-Boxes are completely wired at the factory and have a dedicated connection interface for generator sets, the load distribution and renewable energy systems. The Multicluster-Boxes are ideal for use in businesses and to supply electricity to rural regions – with or without grid access.

* On-Grid Multicluster systems with self-consumption at the grid connection point are not permitted in Europe and Australia. However, standard battery-backup systems and the grid operating mode as generator are possible because in both cases the battery can only be charged in parallel grid operation.

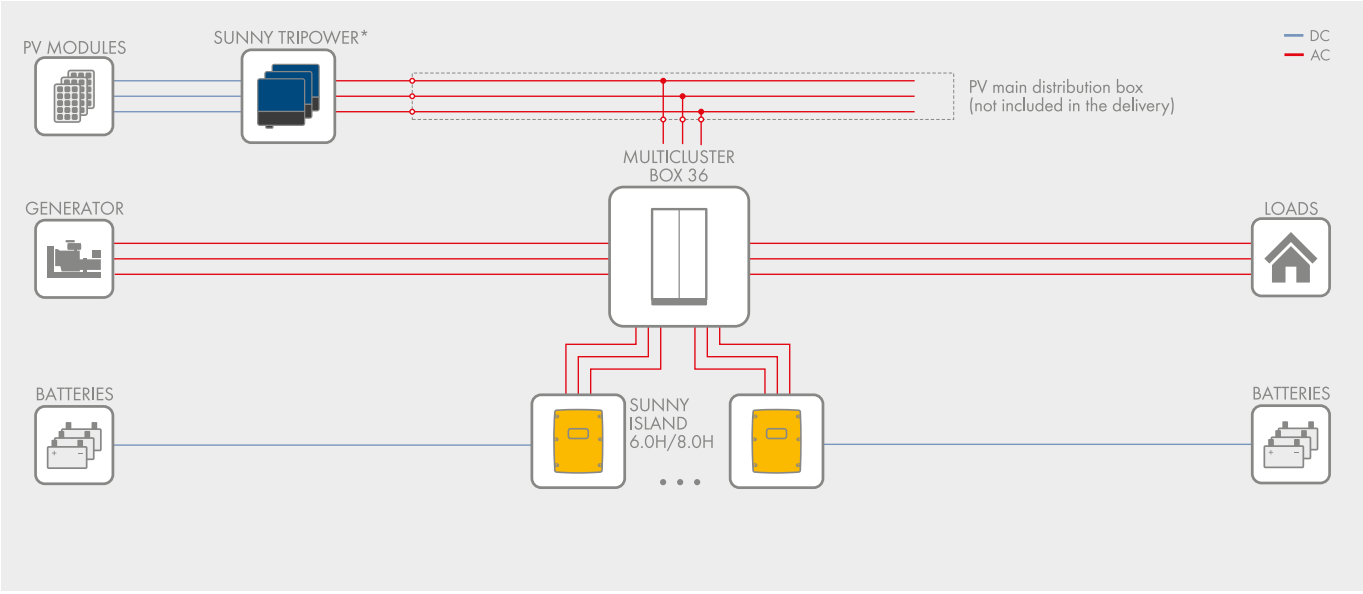

Technical Data	Multicluster-Box 6	Multicluster-Box 36
Load connection		
Rated voltage	230 V (L, N), 400 V (L1, L2)	230 V (L, N), 400 V (L1, L2)
AC voltage range	172.5 V to 250 V 300 V to 433 V	172.5 V to 250 V 300 V to 433 V
Rated frequency / frequency range	50 Hz / 40 Hz to 70 Hz	50 Hz / 40 Hz to 70 Hz
Number of connections	1 x 3-phase	1 x 3-phase
Rated power	55 kW	300 kW
AC current at rated values	3 x 80 A (AC1)	3 x 435 A (AC1)
Fuses	NH00	NH3
Sunny Island connections		
Maximum number of devices	6	36
AC rated power / AC current at rated values	36 kW / 3 x 52 A	216 kW / 3 x 313 A
AC power at 45°C / AC current at 45°C	32 kW / 3 x 46 A	195 kW / 3 x 283 A
AC power (25°C, 30 min)	48 kW	288 kW
AC power (25°C, 5 min)	55 kW	328 kW
Fuses	6 x circuit breaker C40 A	36 x circuit breaker C40 A
Generator connection		
Number of connections	1 x 3-phase	1 x 3-phase
Rated grid input power	55 kW	300 kW
AC input current	3 x 80 A	3 x 435 A (AC1)
Fuses	NH00	NH3
PV system connection		
Number of connections	1 x 3-phase	1 x 3-phase
PV rated power	55 kW	360 kW
AC current at rated values	3 x 80 A	3 x 522 A (AC1)
Fuses	–	–
General data		
Number of phases	3-phase	3-phase
Permitted grid configuration	TN-S	TN-S
Dimensions (W / H / D)	760 / 760 / 210 mm	1200 / 2000 / 800 mm
Mounting type	Suspended	Base mounted
Weight	55 kg	400 kg
Ambient temperature	-25°C to +50°C	-25°C to +60°C
Degree of protection (as per IEC 60529)	IP65	IP54
Maximum permissible value for relative humidity (non-condensing)	0% to 100%	0% to 100%
Max. installation altitude above MSL ≤ 2000 m	●	●
Warranty (5 years)	●	●
Data cables	●	●
Certificates	CE	CE
● Standard feature ○ Optional feature – Not available		
Type designation	MC-Box-6.3-11	MC-Box-36.3-11

*Also possible with Sunny Boy

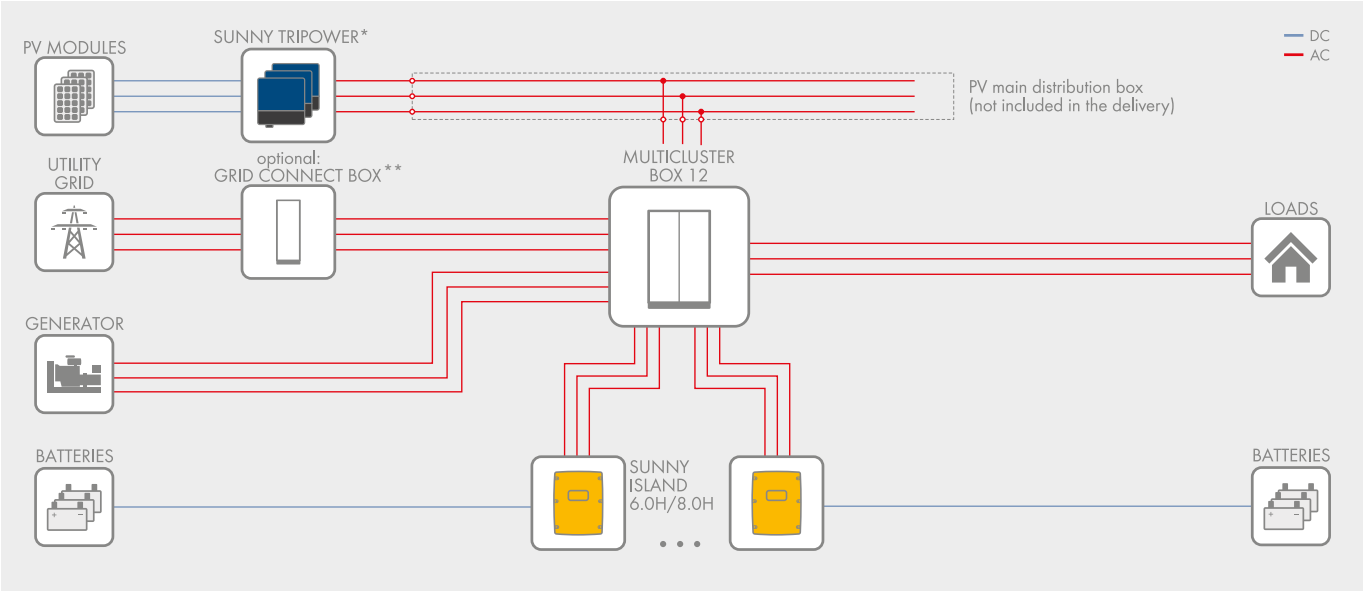

Technical Data	Multicluster-Box 12	Grid-Connect-Box 12
Connection of loads to MC-Box 12 / Connection of Grid-Box 12 to utility grid**		
Rated voltage	230 V (L, N), 400 V (L1, L2)	230 V (L, N), 400 V (L1, L2)
AC voltage range	172.5 V to 265 V 300 V to 433 V	172.5 V to 265 V 300 V to 433 V
Rated frequency / frequency range	50 Hz, 60 Hz / 45 Hz to 65 Hz	50 Hz, 60 Hz / 45 Hz bis 65 Hz
Number of connections	1 x 3-phase	1 x 3-phase
Rated power	138 kW	138 kW
AC current at rated values	3 x 200 A (AC1)	3 x 200 A (AC1)
Fuses	NH1	NH1 (200 A)
Sunny Island connections		
Maximum number of devices	12	–
AC rated power / AC current at rated values	72 kW / 12 x 26 A	–
AC power at 45 °C / AC current at 45 °C	65 kW / 3 x 94 A	–
AC power (25 °C, 30 min)	96 kW	–
AC power (25 °C, 5 min)	110 kW	–
Fuses	12 x circuit breaker C40A	–
Generator connection		
Number of connections	1 x 3-phase	–
Rated grid input power	138 kW	–
AC input current	3 x 200 A	–
Fuses	NH1	–
PV system connection		
Number of connections	1 x 3-phase	–
PV rated power	138 kW	–
AC current at rated values	3 x 200 A	–
Fuses	–	–
General data		
Number of phases	3-phase	3-phase
Permitted grid configuration	TN-S, TN-C-S and TT	TN-S, TN-C-S and TT
Dimensions (W / H / D)	1200 / 1600 / 435 mm	600 / 1400 / 435 mm
Mounting type	Base mounted	Base mounted
Weight	200 kg	103 kg
Ambient temperature	-25 °C to +60 °C	-25 °C bis +60 °C
Degree of protection (as per IEC 60529)	IP55	IP55
Maximum permissible value for relative humidity (non-condensing)	0% to 100%	0 % bis 100 %
Max. installation altitude above MSL ≤ 2000 m	●	●
Warranty (5 years)	●	●
Data cables	●	●
Certificates	CE	CE
Connection to the utility grid (optimized self-consumption and battery-backup function) GRID-BOX required	●	●
● Standard feature ○ Optional feature – Not available		
Type designation	MC-Box-12.3-20	GRID-BOX-12.3-20

*Also possible with Sunny Boy

** Grid-Connect-Box 12 does not comply with the applicable standards in Europe for connection to the utility grid. In more specific cases in Europe, please contact SMA Solar Technology AG.

ENERGY
THAT
CHANGES

SMA

www.SMA-Solar.com

SMA Solar Technology

MC-Boxen-DSen-20 SMA and Sunny Island are registered trademarks of SMA Solar Technology AG. Printed on FSC-certified paper.
Changes to products and services, including those resulting from country-specific requirements, as well as deviations from technical data are subject to change at any time without notice. SMA assumes no liability for mistakes or printing errors. For the latest information, please visit www.SMA-Solar.com.