DVT LIGHT

USER MANUAL

MB-8

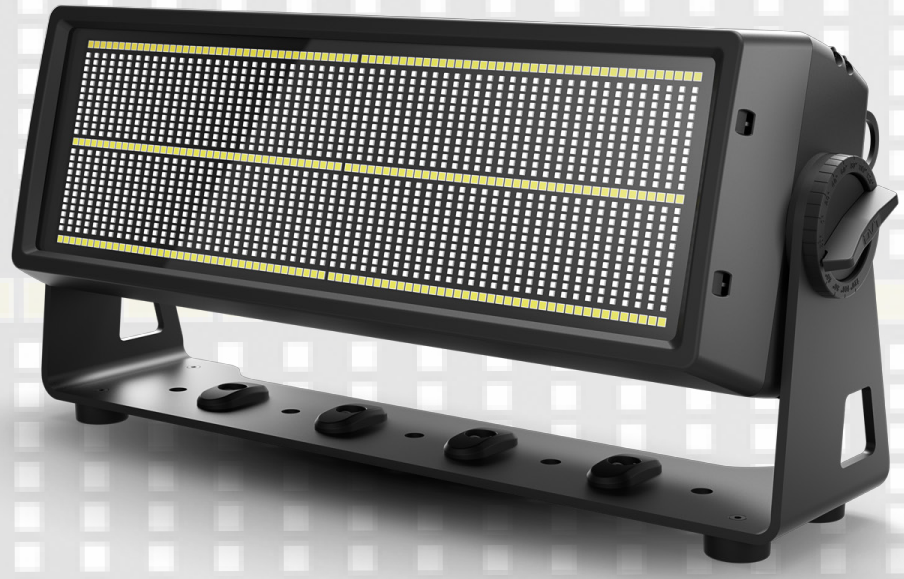

Table of contents

Navigate the entire user manual from this table of contents. The table is interactive, so simply click on the section you want to visit. The table stretches over the next 3 pages.

Safety information **1**

DANGER! Keep the fixture closed. Electric shock risk. 1

WARNING! Avoid fires and burns by always taking precautions. 1

WARNING! Avoid personal harm by always taking precautions. 2

Notes for installing this product **3**

Important safety measures 3

Cleaning and inspecting the product 3

Wires and conduits 4

About the MB-8 ..... **5**

Specifications 5

Dimensions **7**

Parts **8**

Installing the MB-8 9

Contents of the box and where to install the fixture 9

Brackets and rigging 9

Tilt adjustment 11

Configuration and use 12

Control panel 12

Power connection 13

Display 13

Connecting to DMX 14

How to connect to a wireless DMX controller 14

How to disconnect from a wireless DMX controller 15

Configuration for DMX 16

Start address 16

Editing the DMX address 16

Individual- and simultaneous control 16

DMX charts 17

Controlling static color 18

Factory default settings 18

Effects 19

MB-8 control menu 20

Issues and solutions 21

Accessories 22

Barndoors 22

Maintenance and cleaning 23

Updating firmware 23

Cleaning the MB-8 23

Questions and support 24

Notes 25

Notes 26

Notes 27

Safety information

WARNING! BEFORE UNPACKING-, INSTALLING-, POWERING- OR OPERATING THE MB-8, PLEASE READ THE FOLLOWING SAFETY INFORMATION.

All products from DVT Light are exclusively meant for professional use; household- or personal use is not intended. This product must be installed by a person who is familiar with the design-, operation- and potential risks of the fixture, and it must always be done in accordance with the relevant installation code.

DANGER! Keep the fixture closed. Electric shock risk.

- Before connecting the fixture to the AC, make sure the power is turned off.
- There are no components in the MB-8 that can be serviced by the user and the fixture should therefore never be opened.
- Make sure the fixture is electrically linked to earth (ground).
- If there is any sign of damage on the power cable or on the MB-8 itself, do not apply power.
- Never submerge the fixture in any liquid or water.

WARNING! Avoid fires and burns by always taking precautions.

- Only install the fixture in an area with good ventilation.
- Ensure that there is a minimum of 0,5 meters (19 inches) of space surrounding the cooling fans.
- Install the fixture in a position that shields it from unintentional touch.
- Install at least 0,5 meters (19 inches) from the objects that are going to be targeted by the MB-8.
- Make sure to always install in compliance with relevant building codes.
- All materials that could potentially catch fire should be kept at a safe distance from the MB-8.

- Avoid altering the interior- and exterior of the fixture in any way, and make sure never to mask- or filter the light.
- After use, let the fixture cool for at least 15 minutes before handling it.



WARNING! Avoid personal harm by always taking precautions.

- Always avoid looking directly at the MB-8's light source for extended periods of time when standing close to it.
- Make sure that the fixture is adequately fastened to a load-bearing surface and equipped with anti-corrosion hardware when preparing for Permanent Outdoor Installations (POI).
- Make sure the quarter-turn fasteners are properly turned and fastened with an appropriate safety cable when using clamps for temporary installation.
- Be sure to always use caution when installing the MB-8 in high places.
- Secure the MB-8 with appropriate safety cables when installing it in high places, and remember to always adhere to applicable load dimensioning and safety regulations.
- The standard safety wire cable must have a minimum gauge of 4 mm and be authorized for a safe working load (SWL) of ten times the weight of the MB-8.

Notes for installing this product

Important safety measures

Be sure to follow all safety measures and contact us if you have any questions.

- Be sure to only use this product in the intended way. Unintentional use may end up damaging the product.
- All service of the product should be handled by DVT Light or by authorized affiliates.
- Never mount your fixtures in close proximity to dangerous substances and objects (live gas, open flames, electric heaters, etc.)
- Always make sure that your fixtures are installed in a place where they cannot be interfered with by unwanted individuals – especially if the fixtures are mounted permanently.
- You may end up damaging the fixture if you use equipment that is not authorized by DVT Light.
- Do not cover the product in any sort of material that might cause it to overheat or that could otherwise damage it.
- Do not look into the MB-8's light source for extended periods of time.

Cleaning and inspecting the product

We always recommend users to perform regular cleaning- and maintenance of items from the DVT Light product range. Lamps that are exposed to different types of weather should of course be monitored regularly to make sure there are no structural damages on the external case, lenses, wiring, etc. To avoid any incidents, do not use the fixture if any components are damaged or missing. If you experience any issues or if you have questions, don't hesitate to contact our support.

Wires and conduits

It is not recommended to install fixtures with data and power cable connections in permanently installed conduit or containment. Make sure cable leads are connected as a service loop to a properly rated junction box when installing fixtures in a permanent installation. All installed fixtures must be firmly attached and have the service loop properly protected for the installation site. Make sure that all wiring- and connection work is handled by a qualified professional.

Do you want to make sure that you're viewing the latest version of this manual? Visit our website, www.dvtlight.com, where the most recent version of the user manual will be displayed at all times. We might have updated the instructions in the manual in order to improve the user experience, and if you are reading an older, downloaded version, you might miss out on important updates. Visit the official DVT Light website to learn more.

About the MB-8

The MB-8 is a multi functional fixture with 16 powerful pixels and several unique technologies developed independently by DVT Light, making it a one of a kind product for lighting up areas in- as well as outdoors.

Specifications

Discover all the specifications of the MB-8 (the list stretches from p. 5 - 6).

Product number	50100001
Light type	Flood light
Color spectrum	RGB + W
Number of pixels	16 (4 x RGB / 12 x White)
LED type	25W
Beam angle	10° - 45° (120° Field)
Interfaces	OLED display and control panel
DMX mode	See latest DMX Charts
DMX functions	See latest DMX Charts
Standalone functions	Yes
Control	DMX 512, Wireless DMX, RDM-enabled
Operating elements	Control panel with UP-, DOWN-, ESC-, ENTER-buttons
Display elements	OLED display

Operating voltage	100 - 240 VAC (47 - 63 Hz)
Power supply connection	True1 in- and out
Electrical protection class	Class I
Maximum power consumption	600 W
Inrush current	25A/115V - 50A/230V
Light intensity	@ 1 m: 360.447 Lux
Luminous flux	100.000+ lm
Efficiency	166 lm/W
Power factor	>0,99 @100V - >0,95 @230V
Ambient temperature	-40°C - +50°C
Housing material	Plastic, aluminum
Housing color	Black
Corrosion resistance	C5-M
Protection class	IP66
Minimum distance to normal flammable materials	0,5 m
Minimum distance to illuminated surface	0,5 m
Dimensions (H x W x D)	H: 28,6 cm / W: 63,6 cm / D: 17 cm
Weight	16,6 kgs.
Accessories supplied	2 Omega brackets
Optional accessories	Barndoors

Dimensions

Experience the complete dimensions of the MB-8, and learn the exact length, depth and width of the different components. If you need more information about the dimensions of the MB-8, please contact us on: *support@dvtlight.com*.

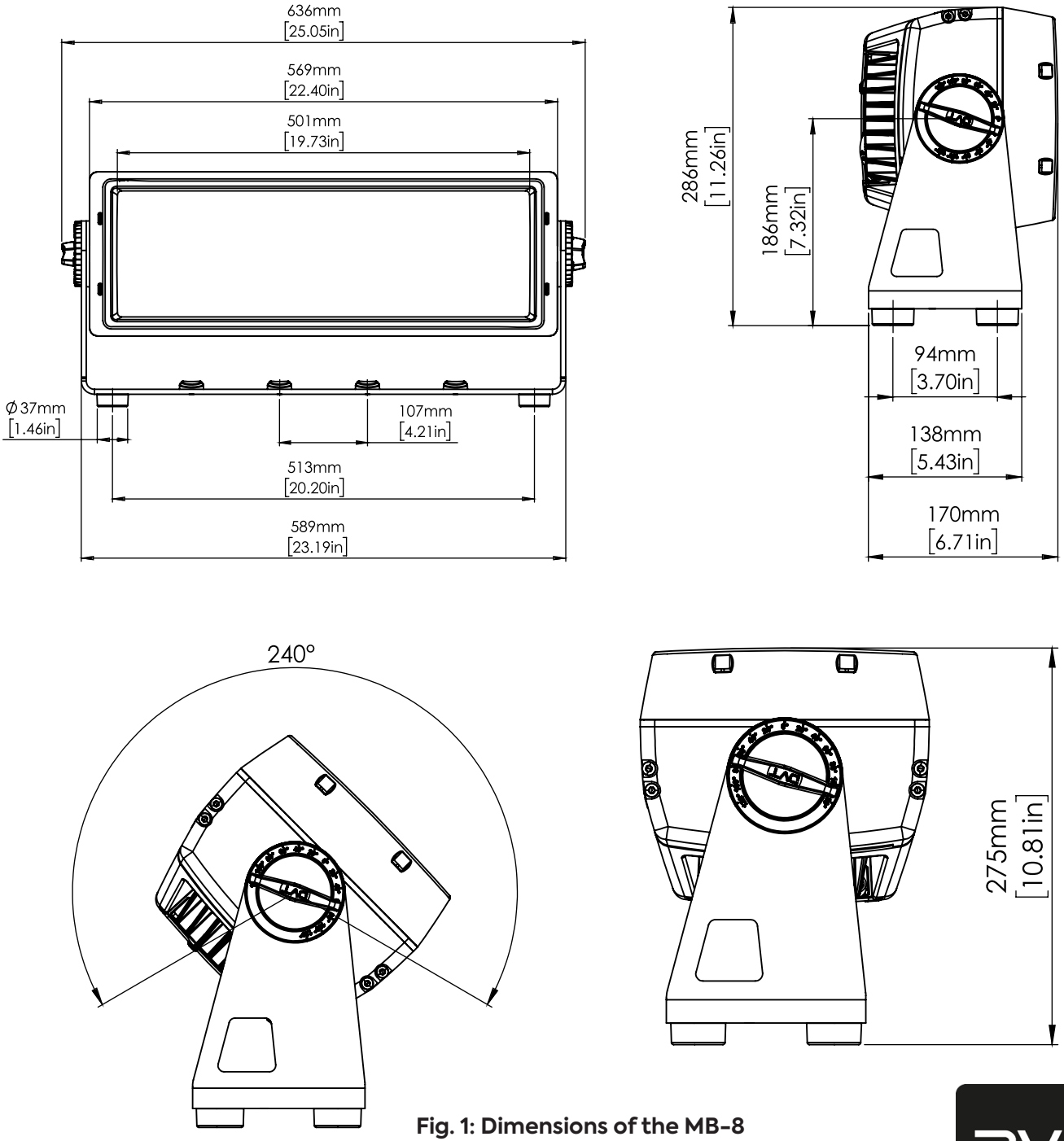

Fig. 1: Dimensions of the MB-8

Parts

- **A:** Tilt lock
- **B:** Rubber feet
- **C:** Safety wire attachment point
- **D:** Cooling fans
- **E:** Power in
- **F:** DMX in
- **G:** Display
- **H:** Control panel
- **I:** DMX out
- **J:** Power out
- **K:** Cam locks for omega bracket
- **L:** Breathable vent
- **M:** Dehumidifier
- **N:** Handle

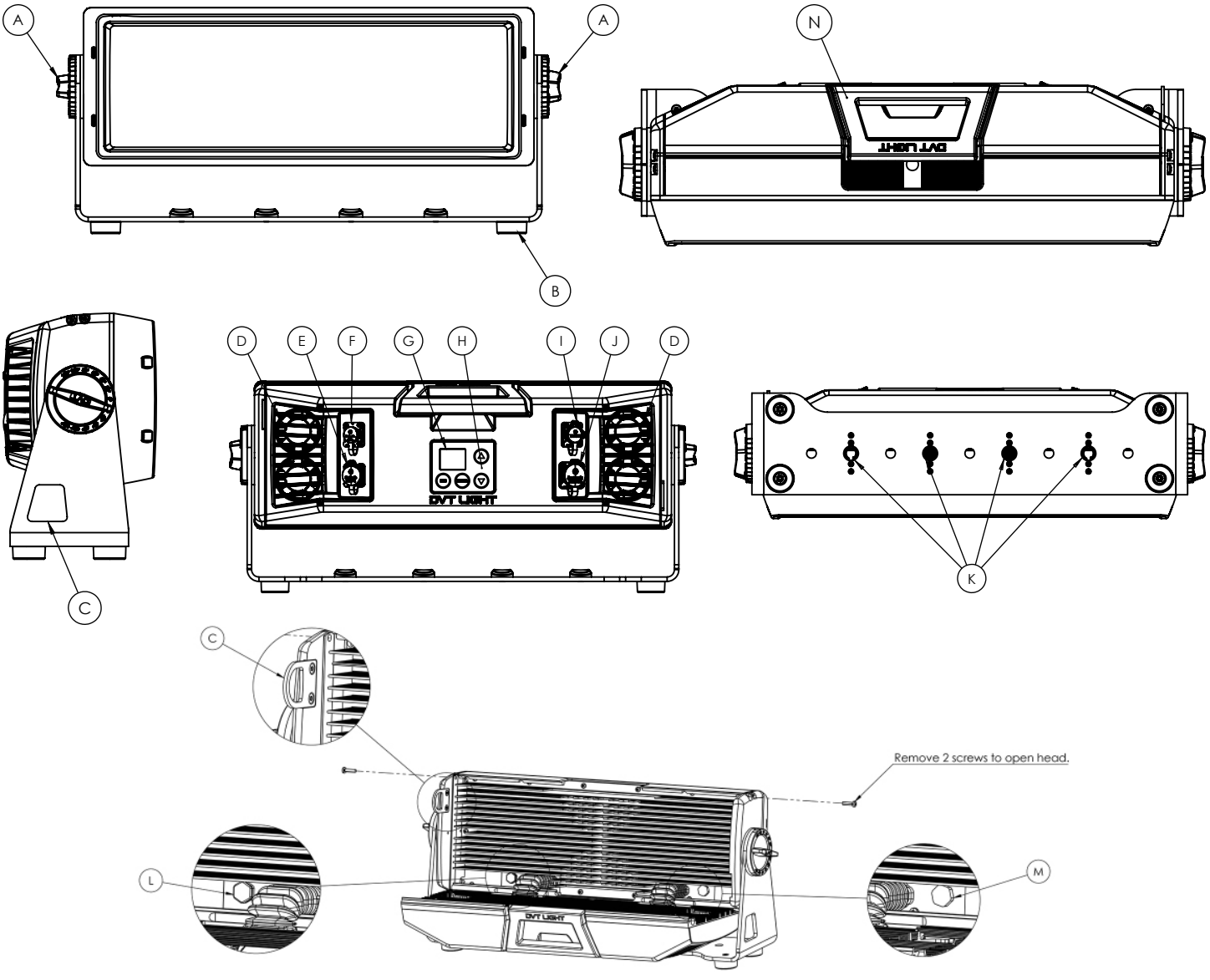

Fig. 2: Identification of parts on the MB-8

Installing the MB-8

Please read the following instructions before using the lamp. If you are unsure about some aspect of the installation, be sure to always refer to the user manual. You are also welcome to contact us at *support@dvtlight.com*.

Contents of the box and where to install the fixture

The MB-8 comes with the following equipment:

- **2 Omega brackets with 1/4 turn fasteners**
- **Safety information leaflet**

The MB-8 has an IP66 rating, which means that it is dust-tight and protected against powerful water jets. The MB-8 can therefore be installed indoors as well as outdoors.

Brackets and rigging

The base of the MB-8 has 4 cam locks that can be used to rig the lamp with omega brackets. There is a distance of 107 mm (4,21 in) between each cam lock.

You can use the cam locks and omega brackets to mount the MB-8 in any direction you want. The fixture can support 2 omega brackets that are mounted horizontally on the base of the MB-8. You can also choose to use 1 omega bracket which can be mounted horizontally in the middle of the base.

NB: Be sure to always inspect the object/structure/area you're planning to rig the MB-8 to, in order to make sure the fixture is fastened safely.

Using omega brackets to rig the MB-8:

NB: *Always make sure that you are in a safe working environment when rigging the MB-8. If you plan to mount the fixture in a certain height or in an otherwise hard-to-reach area, make sure that you have a secure foothold.*

1. Check the base of the MB-8 as well as the omega brackets to make sure that all is undamaged and that nothing is preventing you from completing the rig.
2. Align the omega brackets on the designated holes in the base of the MB-8.
3. Fasten the omega brackets to the base by turning all levers clockwise.
4. Place the MB-8 on the desired object/structure/area and fully lock the brackets.
5. Make sure you always install a safety wire (using the holes on the back side- and base of the fixture) that can carry 10 times the MB-8's weight.
6. Check that no surrounding objects can interfere with the MB-8 while it is rigged.

In case of broken levers: In the unlikely event where one- or both levers on the omega bracket break, use an appropriately sized spanner key to loosen/tighten the nuts placed beneath the levers.

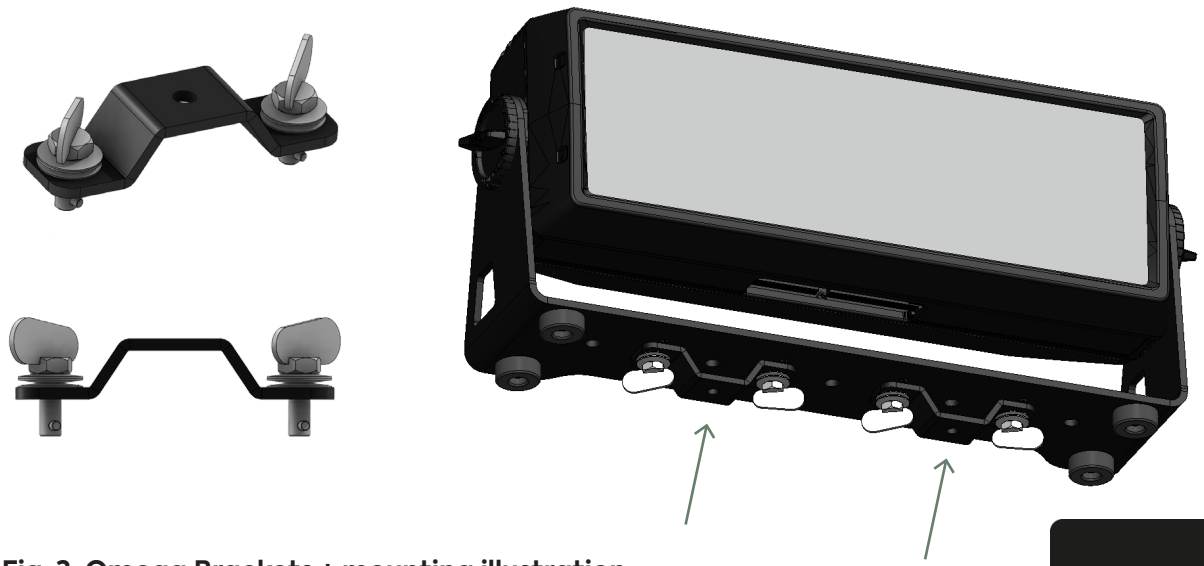

Fig. 3: Omega Brackets + mounting illustration

Tilt adjustment

The tilt position of the MB-8 can easily be adjusted from 0° - 120°.
We have designed a unique tilting system that secures both high functionality and easy tilt adjustment. The MB-8 comes without any specific adjustment tools, as the tilt angle can be altered using only your hands.

Use the following instructions to adjust the tilt of the MB-8:

1. Loosen the 2 knobs on the side of the fixture (one on either side of the lamp) by turning them counterclockwise.
2. Adjust the tilt of the fixture to the desired angle (different angles/degrees are illustrated on the rings under the knobs, making it easy to find the desired position).
3. When the desired tilt position has been achieved, refasten the 2 knobs by turning them clockwise until they are safely held in place (until they can not be turned any further).

CAUTION: Be sure to always let the fixture cool down after it has been turned on. The fixture should always be allowed to cool down for 15-20 minutes before handling it without heat resistant gloves.



Fig. 4: Illustration of tilt lock on the MB-8

Configuration and use

When you are ready to turn on the MB-8, use the integrated buttons and OLED display to control the fixture. The MB-8 can also be controlled through RDM.

Using the control panel and OLED display, you have full control over all of the fixtures' functionalities. The physical buttons on the panel allow you to browse-, confirm- and deselect settings - among many other things. The OLED display visualizes your actions and makes it easy for you to navigate the settings of the fixture.

To turn the fixture on and off, simply plug in- or remove the power cable. When powering on the MB-8, the display shows which mode it is currently in. To change the mode, use the buttons on the control panel.

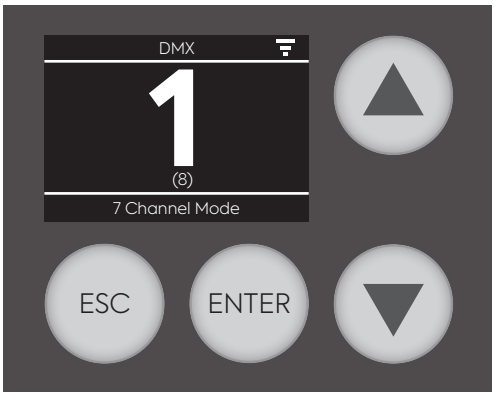

Fig. 5: Illustration of display and control panel

Control panel

- **ENTER-button:** Use the ENTER-button to select/confirm settings.
- **ESC-button:** Use the ESC-button to deselect an option/to go back in the menu.
- **ARROW UP and -DOWN buttons:** Use the ARROW UP and -DOWN buttons to navigate the menu on the display.

1. Operational mode (Static color or DMX)
2. DMX address
3. Next available DMX address (depending on the current DMX mode)
4. DMX Mode
5. Wireless DMX

NB: The number indicating the DMX address will either blink or be static. Blinking means that the lamp is not receiving DMX, and static means that it is receiving DMX.

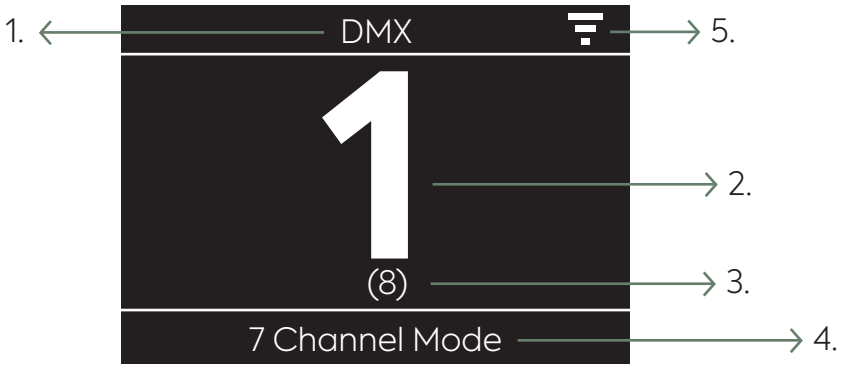

Fig. 6: Illustration of display on the MB-8

Power connection

The fixture accepts any 100-240 VAC, 47-63 Hz power supply. Feel free to use any power cable for the MB-8 - but always make sure that it meets the specifications mentioned above.

CAUTION: Never connect the MB-8 to a power cable at any other voltage or frequency than advised **(100-240 VAC, 47-63 Hz)** as it may cause damage to the fixture.

Connecting to DMX

The MB-8 can be controlled through DMX and offers multiple ways of doing so. If you choose to control the fixture through a cabled DMX control device, you can do so by using a 5 pin DMX cable.
Connect the DMX-in cable to the input connector on the back of the MB-8. Likewise, connect the DMX-out cable to the output connector on the back of the fixture.

You can also choose to control the MB-8 through the built in wireless CRMX system. The fixture supports double connectivity - meaning that you can connect to a cabled- and wireless DMX controller simultaneously. However, the MB-8 will always prioritize the cabled connection.

NB: If you choose to go with the wireless, cable-free DMX connection, be sure to always keep the caps closed on the in- and output connectors on the back of the fixture. By keeping the caps closed, you maintain the MB-8's IP-rating while using the wireless connection.

How to connect to a wireless DMX controller

The MB-8 will always look to connect to a wireless DMX controller when turned on. It is therefore easy to connect the fixture to a controller - simply turn on the controller and press "link" or "pair" (depending on the device).

To link a MB-8 to a new wireless controller, you need to unlink it from the current one. To do so, use the steps in the following section "How to disconnect from a wireless DMX controller". When the fixture is unlinked, you can connect a new controller.

How to disconnect from a wireless DMX controller

When you want to disconnect the fixture from a wireless controller, simply follow the steps below:

1. When on the main screen, press “ENTER” to navigate to the main menu screen.
2. Use the “ARROW DOWN”-button to navigate to “Settings” and press “ENTER”.
3. Use the “ARROW DOWN”-button to navigate to “Wireless” and press “ENTER”.
4. Use the “ENTER”-button to press the “Unlink”-option.

Configuration for DMX

Below you will find everything you need to know about using DMX on the MB-8. Learn how to control your lamps through DMX, how to make them act independently, in unison and much more.

Start address

When connecting a MB-8 to DMX, you will always need to choose a channel mode. The specific channel you choose after selecting a mode will always be the DMX start address for the specific lamp.

Editing the DMX address

The current DMX channel is always displayed on the main screen. To change the DMX address, simply use the “ARROW UP” and “ARROW DOWN” buttons to navigate through the different channels and press “ENTER” to confirm the new address.

Individual- and simultaneous control

You can control your fixtures individually through DMX, but you can also choose to control several lamps simultaneously. To control the lamps individually, make sure each MB-8 has its own start address. For example, if you are running 7 channel mode and the first lamp has address 1, the next one must have address 8 to stand alone, and the third lamp must have address 15, etc.

If several MB-8s share the same DMX address, they will act in the complete same way. Leaving multiple fixtures in, for example, address 7 will lead them to behave identically.

DMX charts

The MB-8 can operate in different DMX modes. To make sure you have the latest DMX charts, go to www.dvtlight.com, visit the MB-8 product page and find the DMX charts under “downloads”.

Controlling static color

You can manually control the static colors on the MB-8 by using the control menu. Follow these steps to control the static colors:

1. Press “ENTER” to navigate to the main menu.
2. Use the “ARROW DOWN” button to navigate to “Manual” and press “ENTER” to confirm.
3. Press “ENTER” to choose “Static Color”.
4. From the static color menu, you can control Red, Green, Blue, CTC and Diffuser manually.

Factory default settings

To set the MB-8 to the factory default, simply follow these steps:

1. Press “ENTER” to navigate to the main menu.
2. Use the “ARROW DOWN” button to navigate to “Settings” and press “ENTER” to select.
3. Press “ENTER” to select “Factory Default”.
4. Press “ENTER” again to confirm the activation of factory default settings.

Effects

The MB-8 consists of 16 pixels: 4 x RGB (marked with blue in the illustration below) + 12 x White (marked with red in the illustration below). The pixels can be divided into 16 different segments. The segments can be controlled individually, offering a variety of possible lighting options and -designs. Below is an illustration of the 16 different segments:

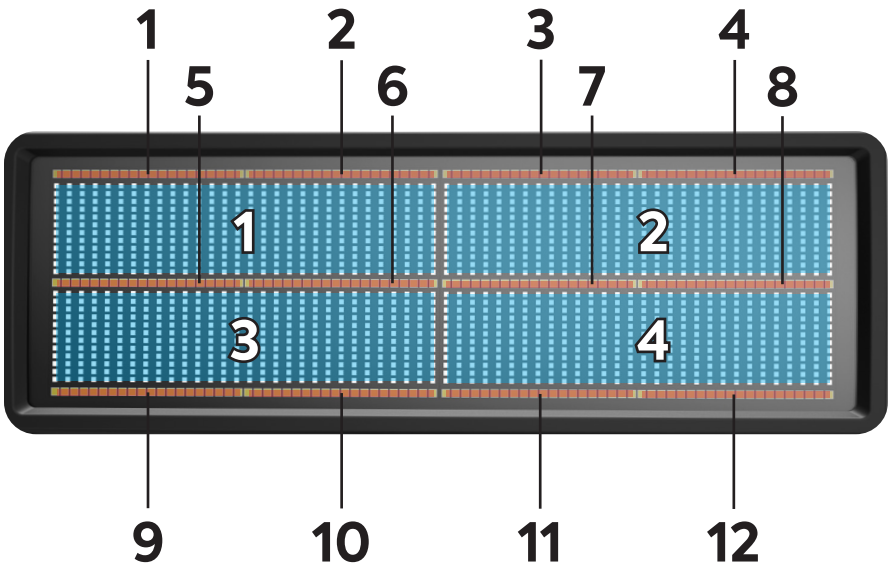

Fig. 7: Illustration of pixel segments on the MB-8

You can control both CTC, strobe and the diffuser (beam angle) on the MB-8, allowing for many different lighting effects. The diffuser is built into the fixture, meaning that you can control the beam angle without changing a physical filter on the lamp.

MB-8 control menu

Below is a table for the complete control menu on the MB-8. Use the table as a guide to operate all the functions. The table continues on the next page.

LEVEL 1	LEVEL 2	LEVEL 3	FUNCTION
Mode	List of DMX Modes	- - -	Activate the different DMX modes
Test	Test All	- - -	Tests all colors
	Test Red	- - -	Tests Red color
	Test Green	- - -	Tests Green color
	Test Blue	- - -	Tests Blue color
	Test White	- - -	Tests White color
Info	DMX	ADR	Info about all DMX channels
	Sensors	Sensors	Info about Main board- and Humidity sensors
	Wireless Info	CRMX	Info screen for wireless function
	Software Version	Software Version	Info about current software version
Manual	Static Color	Red	Manual control of red color
		Green	Manual control of green color
		Blue	Manual control of blue color
		CTC	Manual control of CTC
		Diffuser	Manual control of diffuser

LEVEL 1	LEVEL 2	LEVEL 3	FUNCTION
Settings	Factory Default	Factory Default	Activation of factory default settings
	Wireless	Unlink	Unlink wireless DMX
Startup Mode	DMX	- - -	Choose DMX as startup mode
	Static Color	- - -	Choose Static Color as startup mode

Issues and solutions

Is your MB-8 not acting as you expect it to, or have you run into an unexpected problem? Use the following list to troubleshoot your issue and try fixing it with the available (potential) solutions.

Have you experienced an issue that should also be on the list? Don't hesitate to contact us, so we can add it to the table below and help future users!

Issue	Possible reason for issue	Solution
MB-8 cannot turn on	Power cable is not connected properly	Make sure that the power cable is connected properly
	Internal electronic failure	**Contact us at:** *support@dvtlight.com*
DMX channel indicator keeps blinking	MB-8 is not receiving DMX	Make sure the DMX cable is connected properly/that your wireless DMX box is connected to the MB-8
DMX channel turns red and doesn't stay changed when I try to change it manually	You have not confirmed the choice of a new DMX channel	After changing the DMX channel, confirm your choice by pressing "ENTER"

Accessories

Do you want your MB-8 to become even more versatile than it already is? Then you might want to acquire some of the accessories we have developed specifically for this fixture.

Barndoors

Do you want more control over your light? Attach barndoors to the MB-8 to gain more power over the light beam. Our barndoors are made specifically for the MB-8 to make sure you get the best possible result.
Are you interested in some barndoors for your fixtures? Contact us to place an order (sales@dvtlight.com).

NB: We are continually working on new features for all of our products (software as well as physical accessories). In order to make sure you are viewing the latest version of the user manual, visit our website www.dvtlight.com and download the manual (we update the downloadable manual every time we make alterations).

Maintenance and cleaning

We recommend that you always keep your MB-8 clean and updated in order to assure that it always performs at its absolute best.

Updating firmware

It is important to make sure your MB-8 always has the latest firmware update. To check if you have the latest version of the firmware, go to www.dvtlight.com and visit the given product page.

Use the following instructions to update your MB-8's firmware:

1. Check which version of the firmware is installed on your MB-8 by navigating to "Firmware" on the control panel.
2. Go to www.dvtlight.com and visit the MB-8 product page. Check if the latest version corresponds with the version installed on your fixture.
3. To install a newer version of the firmware, download it directly on the MB-8 product page and follow the instructions provided when launching the application.

Cleaning the MB-8

The MB-8 is IP66 rated and does therefore not need any internal cleaning. No dust, water or any other substance will enter the fixture, meaning that you don't have to worry about maintaining the inside of the MB-8.

To assure continual, optimal performance of the front lens, regular wiping/cleaning is recommended (especially after outdoor use). Use a cloth moistened with water (and a small amount of detergent if necessary) to clean the housing of the MB-8.

The fans on the back of the MB-8 should also be cleaned regularly to assure optimal cooling of the fixture. Always be careful when cleaning the fans and avoid inserting sharp, pointy objects directly into the vents, as doing so may damage the fans. To effectively- and safely clean the fans, use either compressed air or a thin, dry cloth.

NB: Make sure to always keep the caps closed on the in- and output connectors on the back of the MB-8 to make sure no unwanted particles enter the fixture.

Questions and support

Do you have any questions about the MB-8, or do you just need to get in touch with us?
You are always welcome to contact us whenever you feel the need to. Our phones are always open from Monday - Friday between 8 - 16 CET (with the exception of national holidays). We always strive to answer your e-mails as fast as possible, so long as we receive them within our opening hours.

Mail: *support@dvtlight.com*

Notes

Notes

Notes

DVT Light Holding ApS
Birkegaardsvej 36D
8361 Hasselager
Denmark
sales@dvtlight.com
www.dvtlight.com

