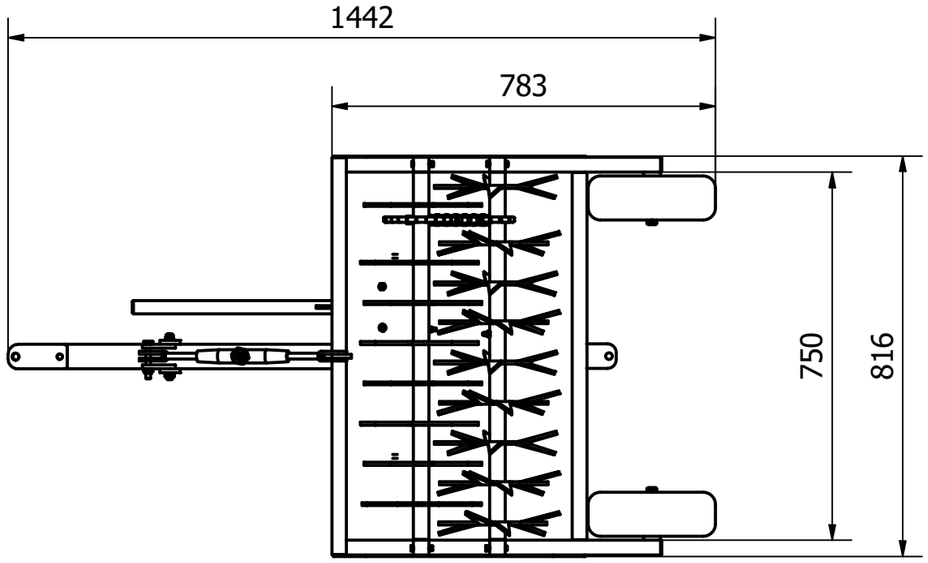

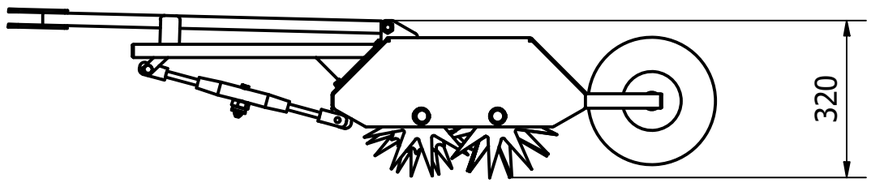

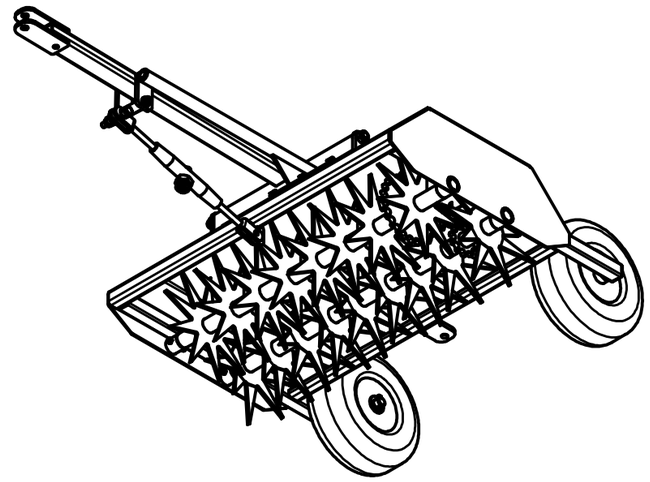

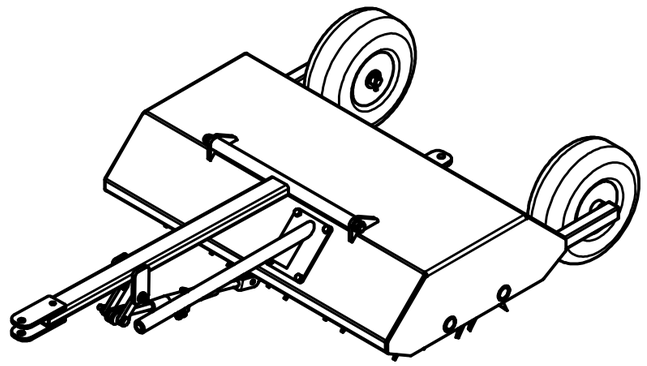

Weight: 54kg
Color: RAL3000

Designed by	Checked by	Approved by	Date	Date	
Anders Bruun				31/05/2021	

0 Mossrider cpl M75	Edition	Sheet 1 / 1