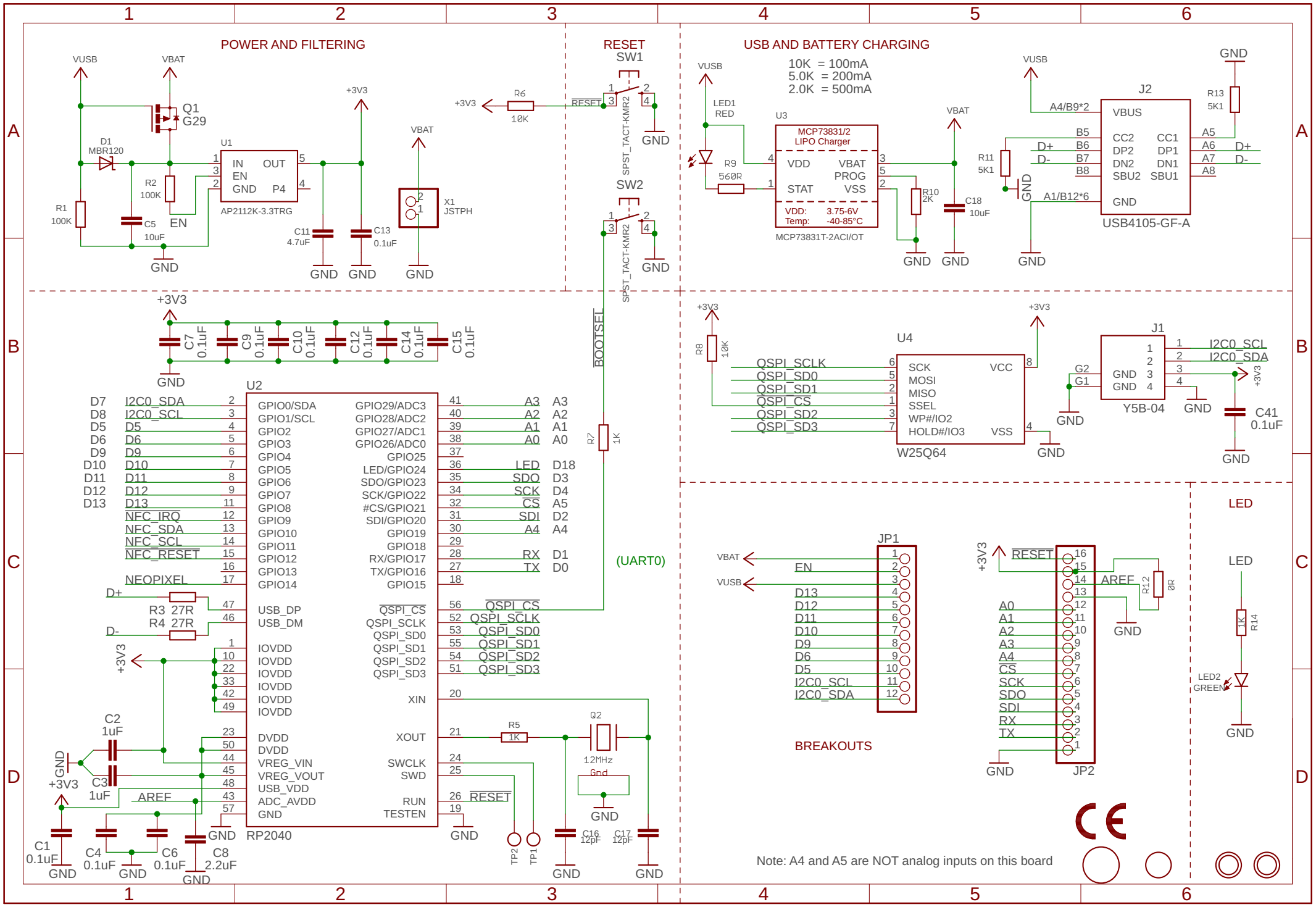
POWER AND FILTERING
VUSB
VBAT
Q1
G29
D1
MBR120
R1
100K
R2
100K
C5
10uF
EN
U1
IN
EN
GND
OUT
P4
AP2112K-3.3TRG
+3V3
C11
4.7uF
C13
0.1uF
X1
JSTPH
GND
RESET
SW1
SW2
SPST_TACT-KMR2
R6
10K
USB AND BATTERY CHARGING
10K = 100mA
5.0K = 200mA
2.0K = 500mA
LED1
RED
R9
560R
U3
MCP73831/2
LIPO Charger
VDD
STAT
VBAT
PROG
VSS
VDD: 3.75-6V
Temp: -40-85°C
MCP73831T-2ACI/OT
R10
2K
C18
10uF
J2
VBUS
CC2
DP2
DN2
SBU2
CC1
DP1
DN1
SBU1
A4/B9*2
B5
B6
B7
B8
A1/B12*6
A5
A6
A7
A8
D+
D-
R11
5K1
R13
5K1
USB4105-GF-A
C7
0.1uF
C9
0.1uF
C10
0.1uF
C12
0.1uF
C14
0.1uF
C15
0.1uF
BOOTSEL
R7
1K
U2
RP2040
GPIO0/SDA
GPIO1/SCL
GPIO2
GPIO3
GPIO4
GPIO5
GPIO6
GPIO7
GPIO8
GPIO9
GPIO10
GPIO11
GPIO12
GPIO13
GPIO14
USB_DP
USB_DM
IOVDD
DVDD
VREG_VIN
VREG_VOUT
USB_VDD
ADC_AVDD
GPIO29/ADC3
GPIO28/ADC2
GPIO27/ADC1
GPIO26/ADC0
GPIO25
LED/GPIO24
SDO/GPIO23
SCK/GPIO22
#CS/GPIO21
SDI/GPIO20
GPIO19
GPIO18
RX/GPIO17
TX/GPIO16
GPIO15
QSPI_CS
QSPI_SCLK
QSPI_SD0
QSPI_SD1
QSPI_SD2
QSPI_SD3
XIN
XOUT
SWCLK
SWD
RUN
TESTEN
I2C0_SDA
I2C0_SCL
D5
D6
D9
D10
D11
D12
D13
NFC_IRQ
NFC_SDA
NFC_SCL
NFC_RESET
NEOPIXEL
D+
D-
R3 27R
R4 27R
A3
A2
A1
A0
LED
SDO
SCK
CS
SDI
A4
RX
TX
D18
D3
D4
A5
D2
D1
D0
(UART0)
R5
1K
Q2
12MHz
C16
12pF
C17
12pF
TP2
TP1
C2
1uF
C3
1uF
AREF
C1
0.1uF
C4
0.1uF
C6
0.1uF
C8
2.2uF
U4
W25Q64
SCK
MOSI
MISO
SSEL
WP#/IO2
HOLD#/IO3
VCC
VSS
R8
10K
J1
Y5B-04
GND
G2
G1
C41
0.1uF
BREAKOUTS
JP1
JP2
LED
R14
1K
LED2
GREEN
R12
0R
Note: A4 and A5 are NOT analog inputs on this board

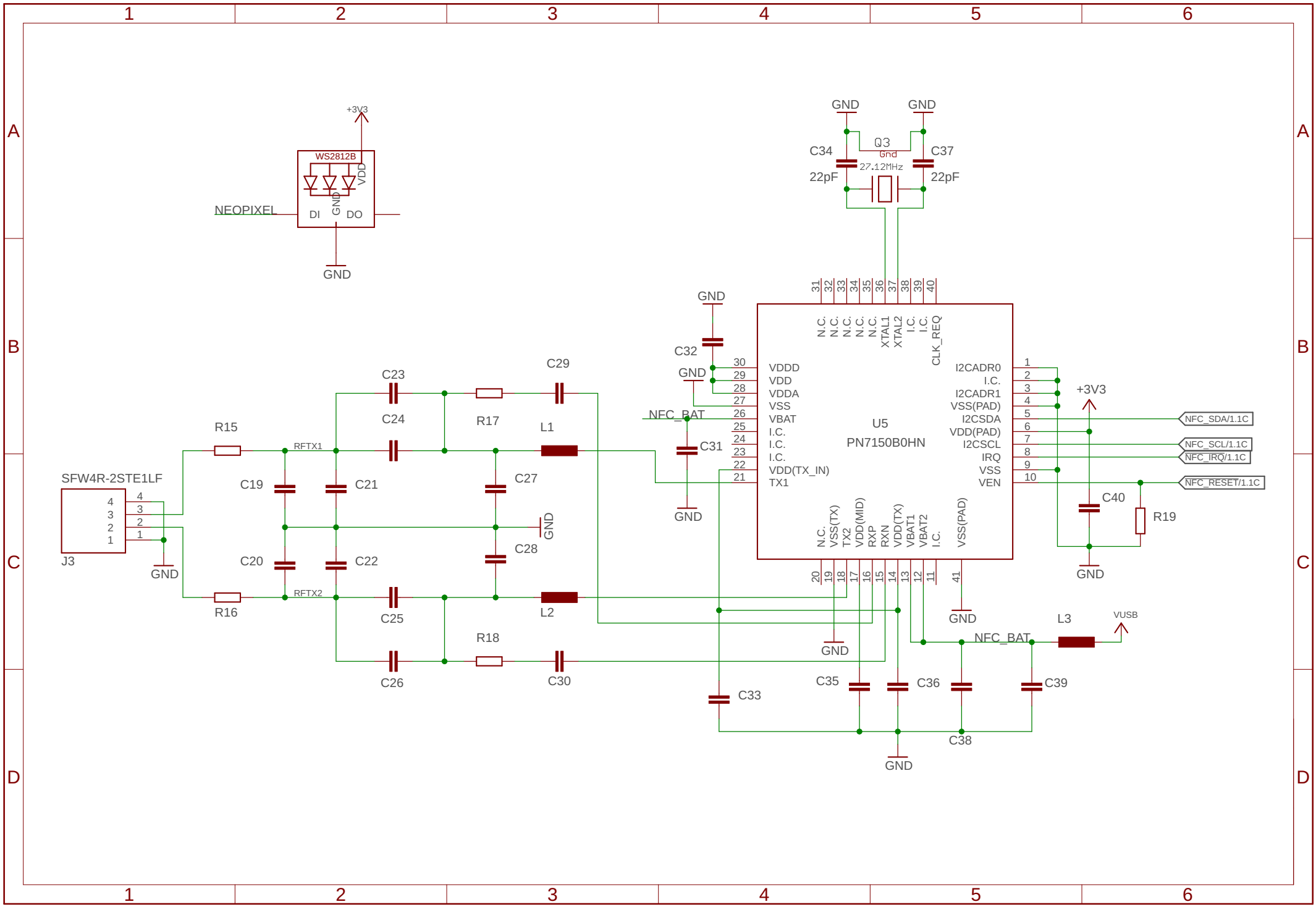
+3V3
WS2812B
VDD
GND
DI
DO
NEOPIXEL
GND
GND
GND
C34
22pF
Q3
27.12MHz
C37
22pF
GND
C32
GND
NFC_BAT
C31
GND
U5
PN7150B0HN
VDDD
VDD
VDDA
VSS
VBAT
I.C.
I.C.
I.C.
VDD(TX_IN)
TX1
N.C.
N.C.
N.C.
N.C.
N.C.
XTAL1
XTAL2
I.C.
I.C.
CLK_REQ
I2CADR0
I.C.
I2CADR1
VSS(PAD)
I2CSDA
VDD(PAD)
I2CSCL
IRQ
VSS
VEN
N.C.
VSS(TX)
TX2
VDD(MID)
RXP
RXN
VDD(TX)
VBAT1
VBAT2
I.C.
VSS(PAD)
+3V3
NFC_SDA/1.1C
NFC_SCL/1.1C
NFC_IRQ/1.1C
NFC_RESET/1.1C
C40
R19
GND
GND
GND
GND
GND
L3
VUSB
NFC_BAT
C33
C35
C36
C38
C39
GND
C23
C24
C29
R17
L1
R15
RFTX1
C19
C21
C27
GND
C28
C20
C22
RFTX2
R16
C25
L2
R18
C26
C30
SFW4R-2STE1LF
J3
GND