SECURITY CLASSIFICATION
PROPRIETARY

SERVICE DRAWING NO. /SHT. NO.

3rd ANGLE PROJECTION

USED ON

DIMENSIONING COMPLIES WITH BS 308. REMOVE ALL BURRS AND SHARP EDGES, ALLOWING A MAX RAD OR CHAMFER OF 0.25mm IN RECESSES, BLIND HOLES AND STEPS.

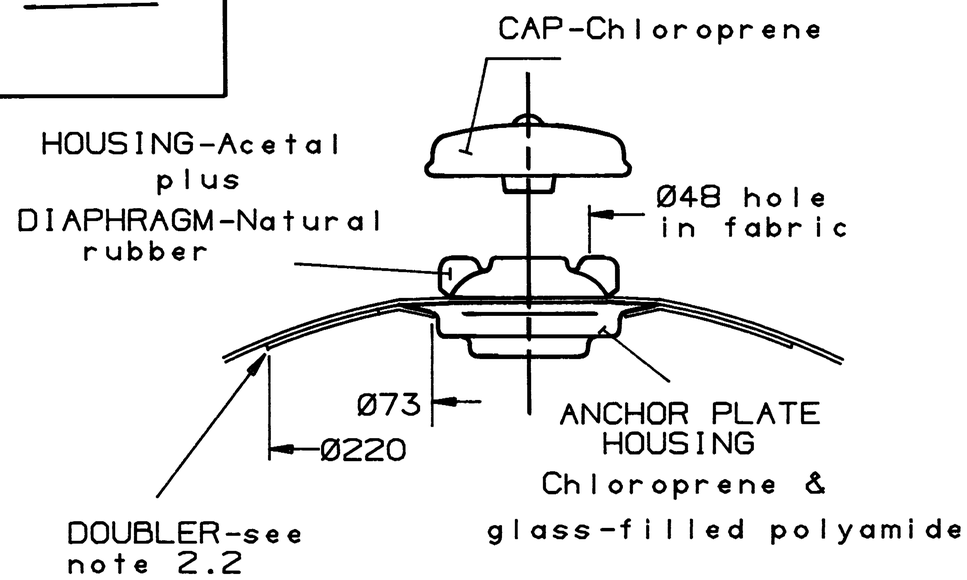

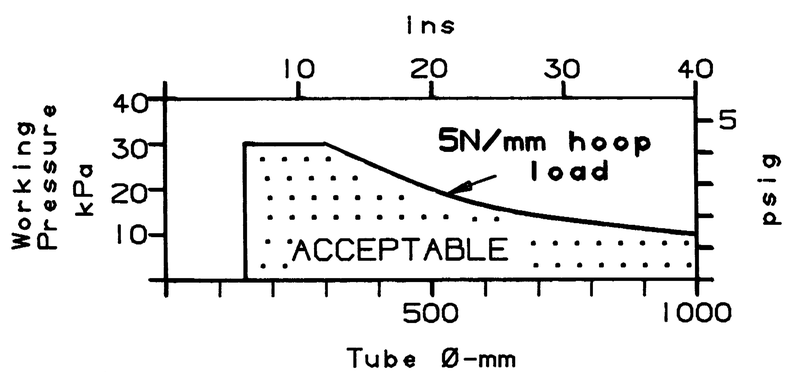

1. STORAGE

1.1. Valves must be stored in accordance with BS3574-Recommendations for the Storage of Vulcanised Rubbers.

2. INSTALLATION

2.1. Anchor plate housing has to be bonded to the the structure and reinforced with a 'doubler'.

2.2. This doubler can be fitted inside or outside and is normally of the same fabric as the structure.

2.3. All surfaces to be bonded are to be lightly abraded. Remove minimum of rubber particularly from the top surface of the anchor plate housing.

2.4. Do not apply working pressure until both the housing and doubler are fully bonded.

2.5. Housing must only be hand tight (approx.7Nm torque).

2.6. If it is necessary to clean the valve use household detergent and warm water,do not use solvent cleaners. A light smear of silicone grease on the rubber sealing surface is allowed, other oils & greases will de-grade the rubber.

2.7. It is the users responsibility to ensure that the valve is not exposed to any environment that will cause de-gradation due to incompatible with the the materials listed.

3. LIMITS to USE

3.1. HOOP LOAD-see curve at left, if load is above specified value the assembly must be tested.

3.2. AMBIENT TEMPERATURE- -30 to +65 degrees C.

3.3. FUELS & OILS will degrade the rubber if exposure is long-term. Wipe off any contaminant immediately.

3.4. SOLVENTS(eg:toluene,tri-chloroethane,xylene,MEK) will severely de-grade the rubber.

CAD PRODUCED DRAWING

APPR'D Bam				MATERIAL	TOLERANCE	CONTRACTOR LEAFIELD ENGINEERING LIMITED, LEAFIELD CORSHAM WILTSHIRE	SECURITY CLASSIFICATION PROPRIETARY
CERT'D							CONTRACTOR'S DRG. NO. IS 814
CHECKED Amw				FINISH	SURFACE ROUGHNESS	TITLE A5 VALVE SERIES INSTRUCTION SHEET	SERVICE DRAWING NO./SHT.NO
DRAWN	M2201	B	30.08.94				A3
	CHANGE	ISSUE	DATE	DIMS IN mm	SCALE NTS		