A
B
C
D
F
A
E

485 LWT

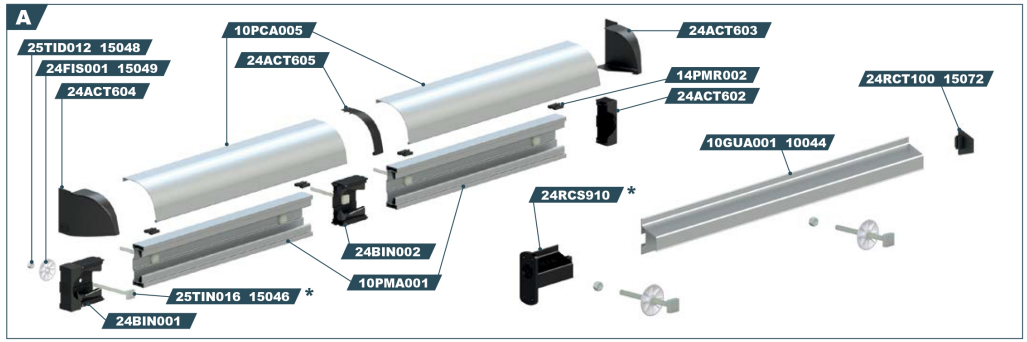
A
25TID012 15048
24FIS001 15049
24ACT604
10PCA005
24ACT605
24ACT603
14PMR002
24ACT602
24RCT100 15072
10GUA001 10044
24RCS910 *
24BIN002
10PMA001
25TIN016 15046 *
24BIN001

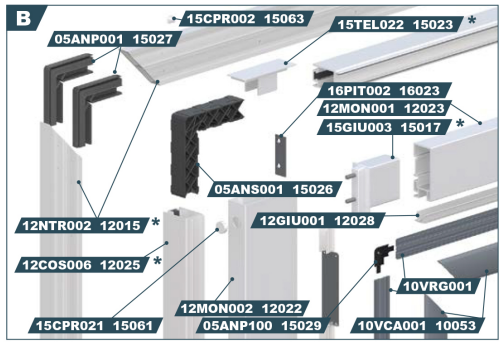
B
15CPR002 15063
15TEL022 15023 *
05ANP001 15027
16PIT002 16023
12MON001 12023
15GIU003 15017 *
05ANS001 15026
12NTR002 12015 *
12GIU001 12028
12COS006 12025 *
10VRG001
12MON002 12022
15CPR021 15061
05ANP100 15029
10VCA001 10053

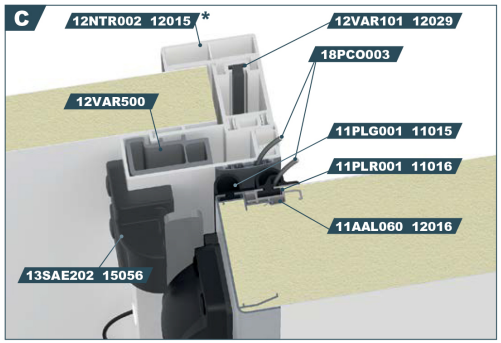
C
12NTR002 12015 *
12VAR101 12029
18PCO003
12VAR500
11PLG001 11015
11PLR001 11016
11AAL060 12016
13SAE202 15056

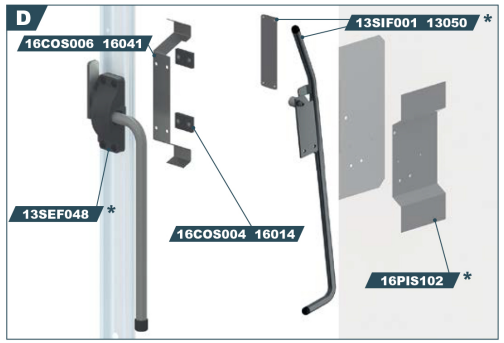
D
16COS006 16041
13SIF001 13050 *
13SEF048 *
16COS004 16014
16PIS102 *

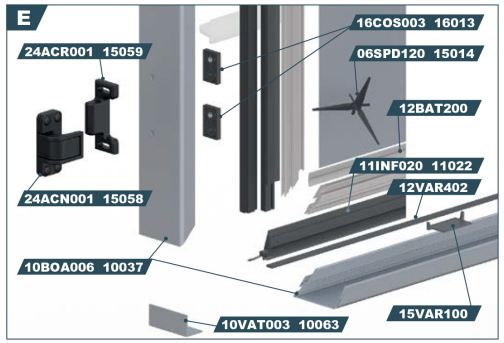
E
16COS003 16013
24ACR001 15059
06SPD120 15014
12BAT200
11INF020 11022
12VAR402
24ACN001 15058
10BOA006 10037
15VAR100
10VAT003 10063

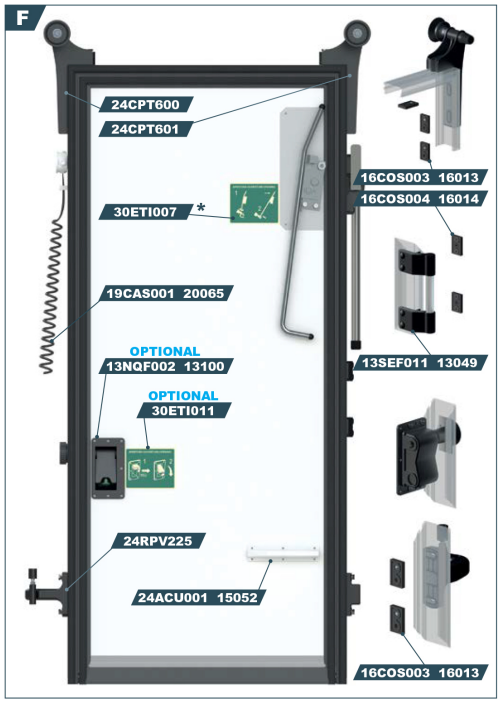
F
24CPT600
24CPT601
16COS003 16013
16COS004 16014
30ETI007 *
19CAS001 20065
OPTIONAL
13NQF002 13100
13SEF011 13049
OPTIONAL
30ETI011
24RPV225
24ACU001 15052
16COS003 16013