A
B
C
D
F
A
E

480 TN

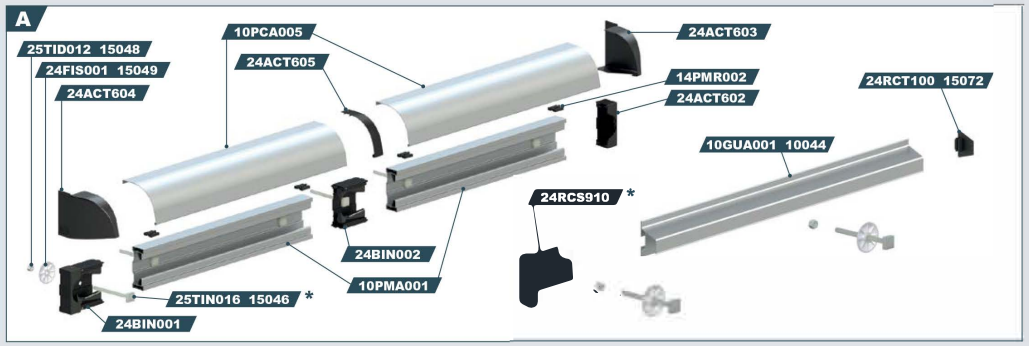
A
25TID012 15048
24FIS001 15049
24ACT604
10PCA005
24ACT605
24ACT603
14PMR002
24ACT602
24RCT100 15072
10GUA001 10044
24RCS910 *
24BIN002
10PMA001
25TIN016 15046 *
24BIN001

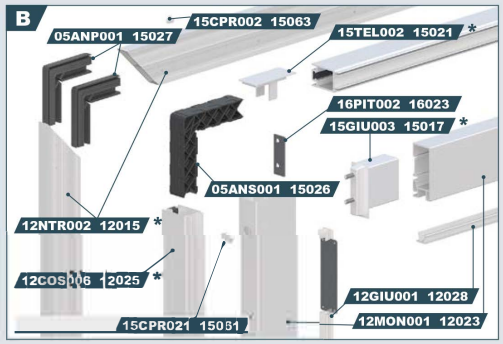
B
15CPR002 15063
05ANP001 15027
15TEL002 15021 *
16PIT002 16023
15GIU003 15017 *
05ANS001 15026
12NTR002 12015 *
12COS006 12025 *
12GIU001 12028
15CPR021 15031
12MON001 12023

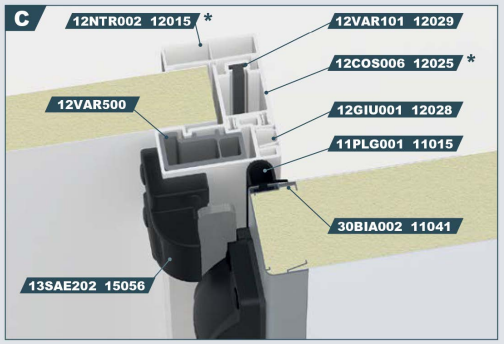
C
12NTR002 12015 *
12VAR101 12029
12COS006 12025 *
12VAR500
12GIU001 12028
11PLG001 11015
30BIA002 11041
13SAE202 15056

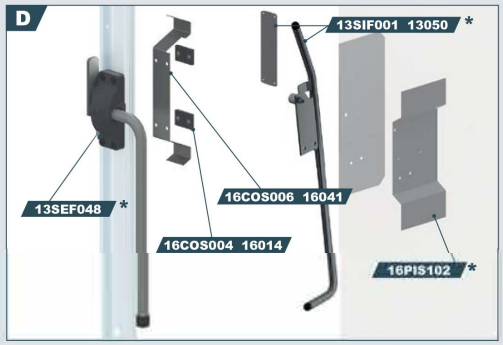
D
13SIF001 13050 *
13SEF048 *
16COS006 16041
16COS004 16014
16PIS102 *

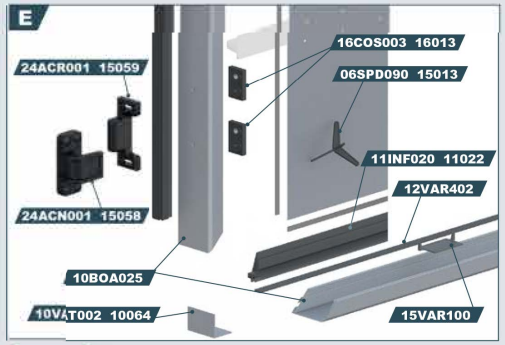
E
16COS003 16013
24ACR001 15059
06SPD090 15013
11INF020 11022
12VAR402
24ACN001 15058
10BOA025
10VAT002 10064
15VAR100

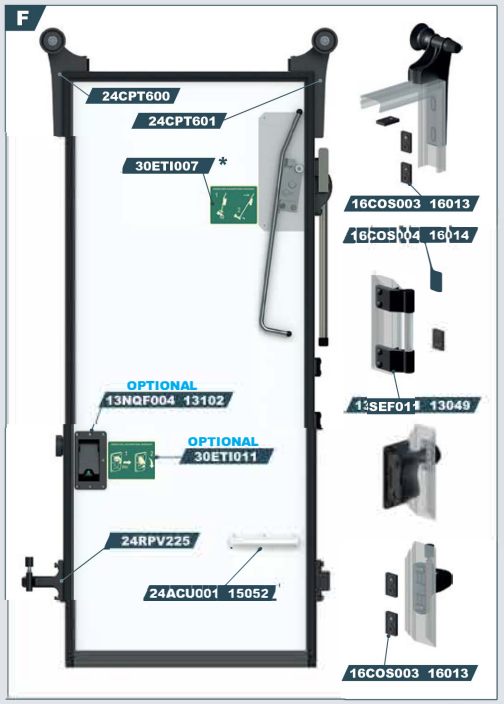
F
24CPT600
24CPT601
30ETI007 *
16COS003 16013
16COS004 16014
OPTIONAL
13NQF004 13102
OPTIONAL
30ETI011
13SEF011 13049
24RPV225
24ACU001 15052
16COS003 16013