FX Pocket Chronograph Pro

Radar Velocity Chronograph

USER MANUAL

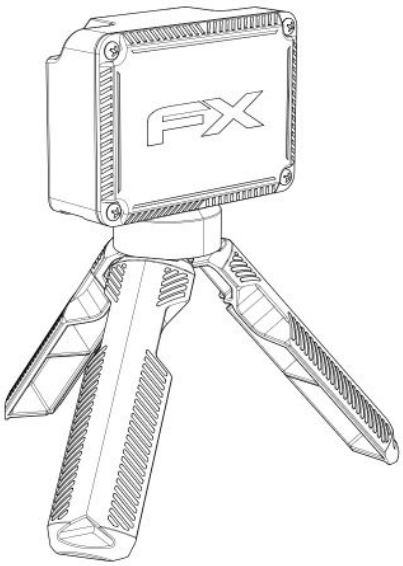

Firmware Version 1.10.85
For Airguns, Firearms & Archery

© 2025 FX Airguns AB. All rights reserved.

Table of Contents

1. Safety & Responsibility 3
2. Product Overview 4
3. Hardware Overview 7
4. Power, Battery & Charging 11
5. Quick Start Guide 12
6. Buttons & Navigation 13
7. Measuring Screens & Sessions 14
8. Menu System 15
9. Settings 17
10. PRS Mode 21
11. Ballistic Coefficient Estimation 23
12. Angle Measurement & Leveling 24
13. Bluetooth & FX Radar App 25
14. Placement, Mounting & Alignment 26
15. Firmware Updates 31
16. Troubleshooting 31
17. Maintenance & Care 33
18. Glossary 34
19. Quick Reference Card 35
20. FCC Statement 37

1. Safety & Responsibility

WARNING: Always follow standard firearm and airgun safety rules when using this device. The chronograph is an electronic accessory and does not replace proper safety equipment or procedures.

The FX Pocket Chronograph Pro is designed to be used alongside firearms, airguns, and archery equipment. You must observe the following safety rules at all times:

- **Treat every gun as loaded. Never assume a firearm is unloaded, even when using the chronograph.**
- **Never point a muzzle at anything you are not willing to destroy. Keep the muzzle pointed in a safe direction at all times.**
- **Keep your finger off the trigger until you are ready to shoot and the chronograph is properly positioned.**
- **Be sure of your target and what is beyond it. The chronograph measures velocity but does not stop projectiles.**

The user is responsible for:

- **Safe mounting and alignment of the chronograph relative to the muzzle.**
- **Verifying that all local laws and shooting range rules are followed.**
- **Interpreting measured velocities and ballistic data responsibly.**
- **Inspecting the device before each use for physical damage.**

NOTE: If anything in this manual conflicts with manufacturer-supplied hardware safety instructions or local range rules, always follow the more restrictive safety guidance.

2. Product Overview

The FX Pocket Chronograph Pro is a compact, professional-grade radar velocity measurement system engineered for precision shooters, airgun enthusiasts, and archery practitioners. Built around a 24 GHz Doppler radar system, it measures projectile velocity without the need for optical screens or dependence on ambient lighting conditions.

Beyond simple velocity measurement, the Pocket Chronograph Pro integrates a comprehensive suite of sensors and intelligent features to provide a complete picture of your shooting conditions and performance.

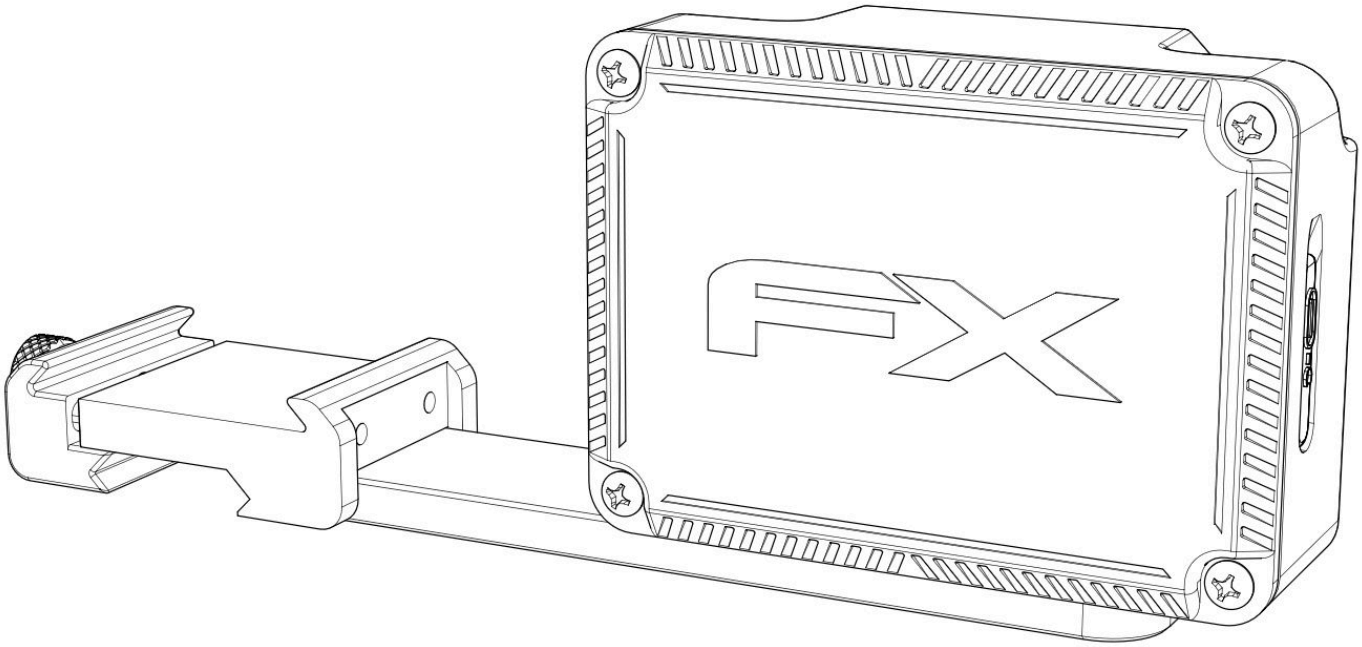

2.1 Key Features

- **24 GHz Doppler Radar:** Non-contact velocity measurement that works in all lighting conditions, indoors and outdoors.

- **Dual Velocity Range:** Low Range for airguns and subsonic projectiles; High Range for centerfire firearms and supersonic rounds.

- **Color Display:** 320×240 pixel full-color TFT screen with Detailed and Large Font display modes.
- Intuitive Two-Button Interface: Context-sensitive left and right buttons for effortless navigation.

- **Built-in Environmental Sensors:** Temperature, barometric pressure, and humidity—logged automatically with every session.

- **Built-in Accelerometer:** Cant and pitch measurement, movement detection, and leveling tool.

- **Ballistic Coefficient (BC) Estimation:** On-device BC calculation using G1, G7, RA4, and GA drag models with environmental corrections. BC estimation is available when operating in Low Range mode.

- **PRS Mode:** Integrated competition stage timer with configurable prep time and stage countdown, displaying cant angle to assist with consistent rifle alignment during shooting.

- **Session Management:** Store up to 100 sessions with full shot data, statistics, weather, and angle information.

- **Bluetooth Low Energy (BLE):** Wireless connection to the FX Radar App for real-time data streaming, session export, and firmware updates.

- **Multiple Velocity Units:** FPS, m/s, Joules, Foot-pounds, and Power Factor with optional secondary display.

- **Carrying Case Included:** A protective carrying case comes in the box to keep your chronograph and accessories safe during transport

- **Tripod Included:** A compact tripod is included for bench or surface mounting — no extra purchase needed.

- **Gun Mount Arm Included:** An Arca-Swiss / Picatinny compatible mounting arm is included for attaching directly to your rifle — perfect for field and competition use.

2.2 Supported Applications

- Airguns: From low-power spring pistols to high-power PCP rifles.
- Firearms: Rimfire through centerfire rifles and pistols.
- Archery: Arrow velocity measurement.
- Competition Shooting: PRS-style timed stages with the integrated PRS Mode.

2.3 What's in the Box

- FX Pocket Chronograph Pro unit
- Compact tripod with 1/4"-20 thread
- Carrying case — keeps everything protected and organized
- Gun mount arm (Arca-Swiss and Picatinny compatible)

NOTE: The carrying case, tripod, and gun mount arm are all included at no extra cost — no separate accessories to buy.

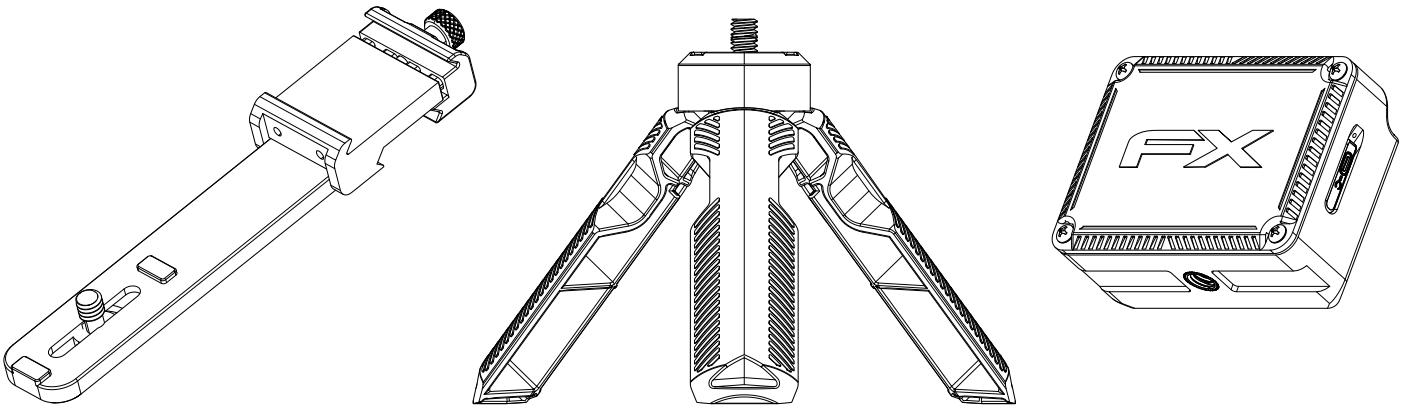

3. Hardware Overview

3.1 Display

The FX Pocket Chronograph Pro features a 2.4-inch full-color TFT display (320×240 pixels) capable of showing menus, live velocity data, session statistics, timer countdowns, and diagnostic information. The display is readable in bright outdoor conditions.

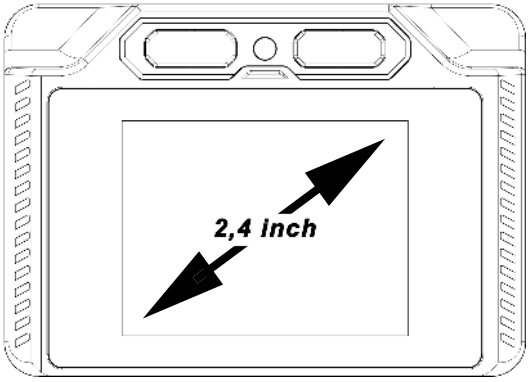

3.2 Buttons

Two tactile front-facing buttons provide all device control:

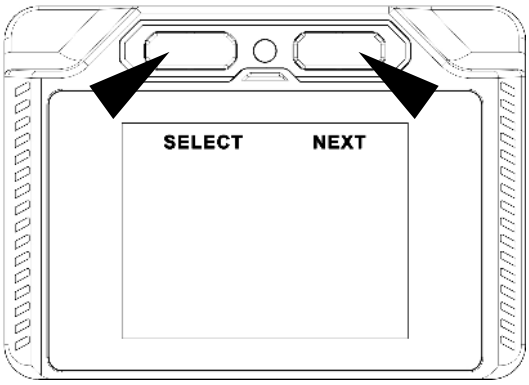

Button	Location	Primary Function
Left Button	Left side of display	Select / Back
Right Button	Right side of display	Next / Power control

Button functions change depending on the current screen context. Detailed button mappings are covered in Section 6.

3.3 Status LEDs

Three multi-color indicator LEDs provide at-a-glance status information. LED behavior is configurable between two modes:

LED Mode	Green	Blue	Red
Stability (Default)	Ready / Power OK	Bluetooth connected	Warning / Movement
Cant (Angle)	Level (within threshold)	Rolled one direction	Rolled opposite direction

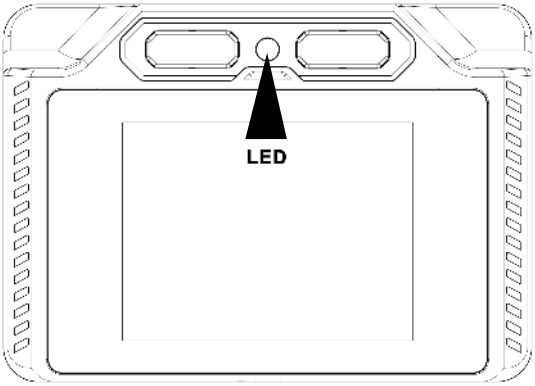

You can switch between these modes in Settings → Display → LED Function.

3.4 Sensors

Radar Module

The 24 GHz continuous-wave Doppler radar is located on the front of the unit and must face downrange toward the projectile path. Do not obstruct or cover the radar aperture.

Accelerometer

The built-in 3-axis accelerometer provides:

- **Real-time cant (side-to-side tilt) and pitch (front-to-back tilt) measurement.**
- **Movement detection for intelligent auto start/stop of measurement.**
- **Angle data logging with every shot .**
- **Angle-based timer start trigger for competition use.**

Environmental Sensor

The integrated environmental sensor measures:

- **Temperature: Compensated for internal self-heating. Can be overridden by phone or manual entry.**
- **Barometric Pressure: Used for density altitude calculation and BC estimation.**
- **Relative Humidity: Logged with each session and used in ballistic calculations.**

3.5 Mounting

The device has a standard 1/4”-20 threaded mounting point on the bottom.

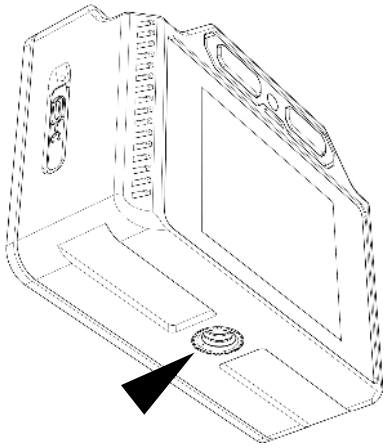

Two mounting accessories are included:

- **Compact Tripod:**

  Screw the tripod into the 1/4”-20 mount. The tripod is ideal for bench shooting, pistol testing, or any freestanding setup where the chronograph sits on a surface next to the shooting position.

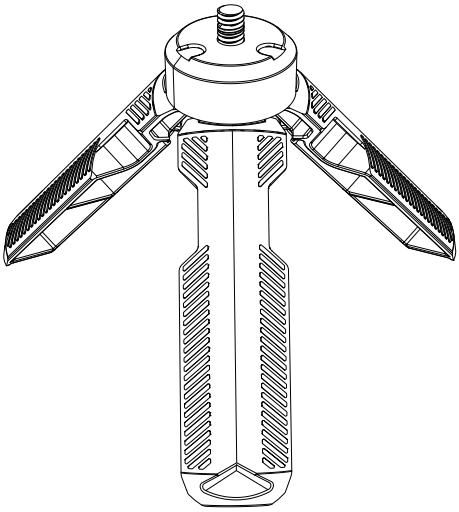

- **Gun Mount Arm:**

  An adjustable mounting arm that attaches directly to your rifle or chassis. Compatible with both Arca-Swiss and Picatinny rail systems. The arm holds the chronograph at the correct distance and alignment relative to the barrel, eliminating the need for a separate surface or tripod. Ideal for field use, competition, and situations where a stable surface is not available.

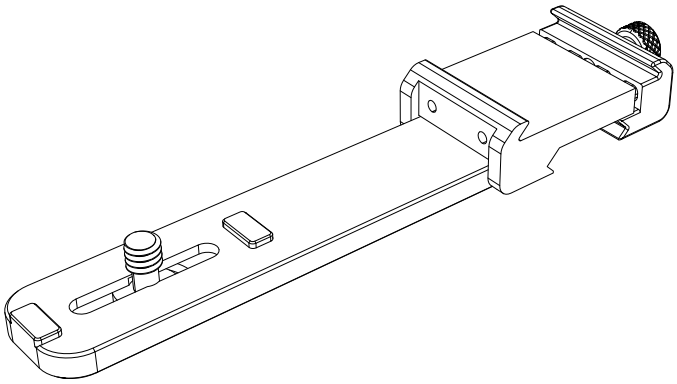

3.6 Interfaces

- **USB-C Port: Charging**
- **Bluetooth Low Energy: Wireless connection to the FX Radar App for data transfer, time sync, temperature sharing, and OTA firmware updates.**

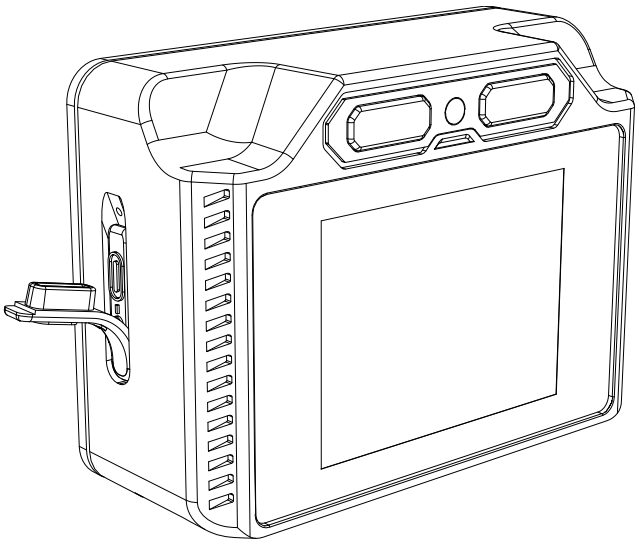

4. Power, Battery & Charging

4.1 Powering On

Long press the right button. The device displays a boot screen showing the FX Airguns logo, then enters either the main menu (on first use) or the main measuring screen (subsequent boots).

4.2 Powering Off

- **Normal Shutdown: Press and hold the right button until the device powers off.**
- **Auto Shutdown: The device shuts down automatically after a prolonged period of inactivity or if the battery drops to a critically low level.**

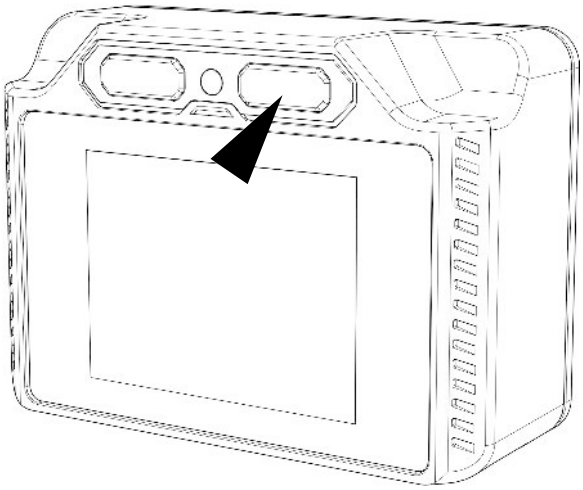

4.3 Battery Monitoring

A battery icon in the status bar shows the current charge level across five states:

Icon State	Approximate Charge	Action
Full	75–100%	Normal operation
Three-Quarter	50–74%	Normal operation
Half	25–49%	Plan to charge soon
Low	10–24%	Charge recommended
Critical	Below 10%	Charge immediately; auto-shutdown imminent

4.4 Charging

- Connect the USB-C cable to a standard USB power source (5V, 1A minimum).
- Full charge takes approximately 2–3 hours.
- Battery life is approximately 8–10 hours of continuous use.
- The device does not operate while charging.

TIP: To maximize battery longevity, store the device at approximately 50% charge if not using it for extended periods. Avoid exposing it to extreme temperatures while charging.

5. Quick Start Guide

This section provides a streamlined recipe to get you measuring velocities as quickly as possible. Detailed explanations of each feature follow in later sections.

5.1 First-Time Setup

1. Power on the device by long pressing the right button.
2. The device opens the menu system on first boot. Use Right (Next) to scroll and Left (Select) to choose.
3. Set your Velocity Units: Settings → Units → Velocity Units. Choose FPS, m/s, Joules, Ft-lbs, or Power Factor.
4. Set Secondary Units (optional): choose a second unit to display on the Large Font screen, or None.
5. Set Temperature Units: choose Celsius or Fahrenheit.
6. Set Drag Model (optional but recommended): Settings → Units → Drag Model. Choose G1, G7, RA4, GA, or None.
7. Set Display Mode: Settings → Display → Screen Mode. Choose Detailed or Large Font.

5.2 Taking Your First Measurements

1. **From the main menu, select New Session.**
2. **Choose a velocity range: Low Range for airguns/subsonic; High Range for firearms/supersonic.**
3. **If using energy units (Joules or Ft-lbs), enter the bullet weight in grains when prompted.**
4. **The device enters the main measuring screen. Mount the chronograph using either the tripod or gun mount arm. Position it as close to the barrel as safely possible, with the radar aperture facing downrange (see Section 14 for detailed placement).**
5. **Shoot. The velocity appears on screen, along with running statistics.**
6. **To start a new session: press Right (short press) from the main screen.**
7. **To access the menu: press Left (short press) from the main screen.**

6. Buttons & Navigation

The FX Pocket Chronograph Pro uses only two buttons. Their function changes depending on the active screen.

6.1 Main Measuring Screen

Button	Short Press	Long Press
Left	Open Menu	
Right	Start New Session	Shutdown

6.2 Menu Screens

Button	Short Press	Long Press
Left (SELECT)	Confirm / enter the highlighted item	Return to parent menu
Right (NEXT)	Scroll to the next menu item	Shutdown

6.3 PRS Mode Screen

Button	Short Press	Long Press
Left	Stop timer, return to menu	—
Right	Start (in READY/PREP) / Pause/Resume (in ACTIVE)	Shutdown

NOTE: If you ever feel lost: from the main measuring screen, press Left to open the menu. In menus, Right moves forward and Left selects. Long-pressing Left returns to the previous menu
level. Repeat to continue moving back through the menu structure.

7. Measuring Screens & Sessions

7.1 Display Modes

Detailed Main Screen

The Detailed screen shows the maximum amount of information at a glance:

- **Large velocity number in the selected primary unit.**
- **Shot count for the current session.**
- **BC status field (if a drag model is enabled). BC estimation is only active when the device is operating in Low Range.**
- **Statistics: minimum, maximum, average, standard deviation, extreme spread.**
- **Environmental data: barometric pressure and relative humidity. Temperature is shown when manually set or received from the phone.**
- **Pitch and cant angle of the previous shot.**
- **Bullet weight (if energy units are in use).**
- **Battery icon and button labels.**

This view is best when you want full visibility of diagnostics and statistics while shooting.

Large Font Screen

The Large Font screen prioritizes readability at a distance:

- **Very large central velocity number.**
- **Unit label (e.g., FPS, m/s).**
- **Optional secondary velocity/energy line (if a secondary unit is configured).**
- **Shot count and cant angle of the previous shot.**
- **Minimal clutter for easy reading from behind the bench.**

7.2 Sessions

A session is a group of shots recorded together. Each session stores:

- **All individual shot velocities with timestamps.**
- **Environmental data: temperature, humidity, barometric pressure.**
- **Cant and pitch angle for each shot.**
- **Ballistic coefficient data (available when a drag model is selected and the device is operating in Low Range).**
- **Bullet weight setting.**

Starting a new session: From the main menu, select New Session, or press Right (short press) on the main measuring screen. The previous session is saved automatically.

Entering the menu: Press Left (short press) on the main measuring screen. This ends the current session and enters the menu. Measurement stops while in the menu.

8. Menu System

8.1 Main Menu

From the main measuring screen, press Left to open the main menu. A roller displays the following items:

1. **New Session — Start a fresh measurement session.**
2. **Saved Sessions — Browse, view, continue, or delete previous sessions.**
3. **PRS Mode — Access the PRS Mode for competition and training use.**
4. **Settings — Configure units, display, connectivity, sensors, and logs.**
5. **About — View firmware version and device information.**

8.2 New Session

Selecting New Session opens the Range menu:

- **Low Range: Optimized for airguns, archery, and subsonic projectiles (approximately 200–1,800 fps / 60 – 550 m/s).**
- **High Range: Optimized for firearms and supersonic ammunition (approximately 1,800–4,500 fps / 550 – 1370 m/s).**

After selecting a range, the device goes directly to the measuring screen. If an energy unit (Joules or Ft-lbs) is configured as either the primary or secondary unit, you will first be prompted to enter the bullet weight in grains.

NOTE: Ballistic coefficient (BC) estimation is supported only in Low Range. BC calculation is disabled in High Range.

8.3 Saved Sessions

The Saved Sessions menu allows you to browse all stored data. Sessions are organized into pages (five sessions per page).

Session List

Each entry shows the session number, average velocity, unit, and shot count. For example:

#12 795.4 FPS / 10

Session Actions

Select a session to access these options:

- **View: Display a list of all shots in the session, newest first. Select any shot to see individual details.**
- **Stats: Open a multi-page statistics view showing min, max, average, SD, spread, BC range, date/time, bullet weight, and weather data (temperature, humidity, pressure, density altitude).**
- **Continue: Load the session and return to the measuring screen. New shots are added to this session.**
- **Send to Phone: Transfer the session over Bluetooth to the FX Radar App.**
- **Delete: Remove the session after a confirmation prompt.**

Individual Shot Details

When viewing a specific shot, you can see its velocity, timestamp, cant angle, and bullet weight. This is useful for identifying outliers or reviewing specific rounds.

8.4 About Screen

The About screen displays the firmware version number (e.g., Version: 1.10.85) and information about connecting to the FX Radar App for firmware updates.

During Bluetooth pairing, the 6-digit passkey is displayed on this screen.

9. Settings

The Settings menu is accessed from the main menu. It contains the following sub-menus:

9.1 Units

Velocity Units

Path: Settings → Units → Velocity Units

Unit	Description	Use Case
FPS	Feet per second	Standard in US shooting sports
m/s	Meters per second	SI / metric standard
Joules	Kinetic energy (SI)	European airgun regulations
Ft-lbs	Kinetic energy (Imperial)	US/UK energy measurement
Power Factor	(Velocity × Grain Weight) / 1000	IPSC/ USPSA competition scoring

After selecting a primary unit, you are prompted to choose a Secondary Unit (same options plus None). The secondary unit is displayed as a smaller line on the Large Font screen.

Temperature Units

Choose between Celsius and Fahrenheit. This affects all temperature displays and manual entry ranges.

Drag Model

Path: Settings → Units → Drag Model

Model	Best For	Description
None	No BC needed	Disables ballistic coefficient calculation
G1	Standard flat-base bullets	Most common for traditional rifle bullets
G7	Boat-tail bullets	Preferred for modern long-range match bullets
RA4	Rimfire ammunition	Optimized for typical rimfire projectile shapes and velocity ranges
GA	Airgun pellets	Optimized for diabolo-shaped pellets

9.2 Display

Screen Mode

Path: Settings → Display → Screen Mode

- **Detailed: Full statistics view with minimum, maximum, average, standard deviation, extreme spread, BC status, cant and pitch angle, and environmental data.**
- **Large Font: Simplified view with very large velocity numbers and optional secondary unit line.**

LED Function

Path: Settings → Display → LED Function

- **Stability Mode (Default): LEDs indicate device status—green for ready, blue for Bluetooth, red for movement warning.**
- **Cant Mode: LEDs indicate device orientation—green when level, red/blue when tilted left or right. Useful as a visual leveling aid.**

Leveling Tool

Path: Settings → Display → Leveling Tool

Opens a dedicated full-screen display showing live cant and pitch angles. Combined with LED Cant Mode, this allows you to precisely level your setup before shooting.

9.3 Connectivity

Path: Settings → Connectivity → Bluetooth

- **ON: Enables the Bluetooth stack. The device advertises itself and accepts connections from the FX Radar App.**
- **OFF: Disables Bluetooth completely to save power or comply with range rules.**

The firmware automatically optimizes Bluetooth connection parameters: faster intervals during menu navigation for responsive control, and slower intervals during measuring to conserve battery.

9.4 Sensors

Movement Detection

Path: Settings → Sensors → Movement

- **ON: The accelerometer gates measurement. The device starts measuring when stable and stops when significant movement is detected. This prevents capturing unwanted data during repositioning.**
- **OFF: Measurement is always active (unless paused by menus or shutdown). Best for permanent bench setups.**

Temperature Source

Path: Settings → Sensors → Temperature Source

- **Phone: Uses the internal temperature sensor by default. If the FX Radar App sends a temperature value via Bluetooth, it overrides the internal sensor reading.**

NOTE: The internal temperature sensor may be affected by device self-heating or direct sunlight. For best accuracy, use the Phone temperature source or manually enter the ambient temperature when the device has been exposed to sunlight.

- **Manual: Use a manually entered temperature value. When switching from sensor to manual, the device pre-fills with the current estimated ambient temperature. Range: −20°C to +49°C (−4°F to +120°F).**

TIP: If the device has been sitting in direct sunlight, use Manual temperature mode with a known ambient temperature for more accurate BC calculations.

Cant Angle Adjustment

Path: Settings → Sensors → Cant Angle ±

Corrects a constant cant offset when the device is mounted to a firearm. This allows the cant display to read level even if the mounting arm or rail introduces a small fixed tilt. A roller shows values from −5.0° to +5.0° in 0.5° steps.

1. **Select Cant Angle ± from the Sensors menu.**
2. **Place the device (and rifle) as you want it to be truly level.**
3. **The header shows the live adjusted cant angle in real time.**
4. **Scroll the roller until the header reads approximately 0.0°.**
5. **Press Left (Select) save and return.**

The stored adjustment is applied to all angle displays, LED Cant Mode, shot logging, and BC calculations.

Trigger Sensitivity

Path: Settings → Sensors → Trigger Sensitivity

Adjusts the dynamic detection threshold used to identify shots in the radar signal:

Setting	Sensitivity	Best For
XL or Slow	Least sensitive	Very large/heavy or slow projectiles; quiet
Large Proj.	Low	Large caliber firearms; heavy pellets
Med Proj.	Moderate (Default)	General use; balanced detection
Small Proj.	High	Small caliber; lightweight pellets
Tiny or Fast	Most sensitive	Very small or very fast projectiles; noisy environments

NOTE: If shots are being missed, move toward more sensitive settings. If you are seeing false triggers from noise or environmental interference, move toward less sensitive settings.

9.5 Logs

Path: Settings → Logs → Clear Logs

Deletes all stored sessions and shot data from internal flash memory after a confirmation prompt. Use this when you have exported your data or want to free storage space.

WARNING: Clearing logs permanently deletes all session data. This action cannot be undone. Export important data via Bluetooth before clearing.

10. PRS Mode

The PRS Mode transforms the chronograph into a comprehensive shot timer for competition training and match use. It combines precise countdown timing with the radar's shot detection capability.

10.1 Entering PRS Mode

From the main menu, select PRS Mode. You will see:

- **Start Timer: Begin a timed stage.**
- **Timer Config: Configure timer parameters.**
- **Back: Return to the main menu.**

10.2 Timer Configuration

Path: PRS Mode → Timer Config

Start Mode

Mode	Description
Button	Start manually by pressing the Right button while in READY or PREP.
Auto at Prep End	Timer automatically transitions from PREP to ACTIVE when prep countdown reaches zero.
Angle Down	Timer starts when the rifle is moved from a high-ready to a firing position (detected by accelerometer).

Prep Time

Available values: 0, 5, 10, 15, 30, or 60 seconds. The prep phase gives you time to get into position after activating the timer.

Stage Time

Available values: 30, 60, 90, 105, 120, 150, 180, 240, 300 seconds; 10, 20, or 30 minutes. This defines the total time allowed to complete the stage.

10.3 Timer States

State	Meaning	Text Color
IDLE	Timer not running	Green
READY	Waiting for start signal	Green
PREP	Preparation countdown active	Blue
ACTIVE	Stage timer running	Green (>30s), Yellow (10–30s), Red (<10s)
TIMEOUT	Stage time expired	Red

10.4 Running a Stage

1. **Configure timer parameters as desired (Start Mode, Prep Time, Stage Time).**
2. **From the PRS menu, select Start Timer.**
3. **The timer screen appears showing the large countdown, state indicator and cant angle.**
4. **Start the timer according to your selected Start Mode.**
5. **Fire your shots during the ACTIVE phase.**

10.5 Timer Controls During Operation

- **Right button (READY/PREP): Manual start / skip to ACTIVE.**
- **Right button (ACTIVE): Pause or resume the timer.**
- **Left button: Stop the timer and return to the PRS menu.**

11. Ballistic Coefficient Estimation

When a drag model is selected (G1, G7, RA4, or GA), the FX Pocket Chronograph Pro estimates the ballistic coefficient of your projectile in real time as you shoot.

11.1 How It Works

The device uses the Doppler radar's ability to track velocity decay over distance. Combined with environmental corrections (temperature, pressure, humidity) and angle data from the accelerometer, the firmware estimates how efficiently your projectile travels through the air.

NOTE: Ballistic coefficient (BC) estimation is supported only in Low Range. BC calculation is disabled in High Range.

11.2 Requirements for Accurate BC

- **A drag model must be selected (not None).**
- **At least 10 good shots are needed for a reliable estimate.**
- **Consistent ammunition and shooting setup.**
- **Sufficient distance for measurable velocity decay.**
- **Proper device leveling (use the Leveling Tool).**
- **The device must be operating in Low Range.**

11.3 BC Status Messages

Display	Meaning
BC: ——	No drag model selected (disabled).
BC: SHOOT X	Need at least X more shots for a reliable estimate.
BC: LOW CONF	Too much shot-to-shot variation; confidence is below threshold.
BC: 0.145–0.152	Confidence interval displayed when enough consistent data is available.

11.4 Tips for Better BC Estimates

- Use the same ammunition lot throughout the session.
- Maintain a consistent distance between the muzzle and chronograph.
- Level the device carefully using the Leveling Tool.
- Shoot in calm conditions when possible (wind affects BC estimation).
- Allow the device temperature sensor to stabilize, or use Manual temperature with a known ambient value.

12. Angle Measurement & Leveling

12.1 Cant Angle

Cant angle measures the side-to-side tilt of the device. This is critical for long-range accuracy because even a small cant introduces windage error. The accelerometer measures cant in real time and the value is:

- Displayed on the Leveling Tool screen.
- Shown on the Large Font main screen.
- Indicated by LEDs when in Cant Mode.
- Logged with every shot for post-session analysis.

12.2 Pitch (Elevation) Angle

Pitch measures the front-to-back tilt. This is useful for:

- Recording shooting angle information for session data and BC calculations when shooting at an incline or decline.

12.3 Leveling Tool

Access via Settings → Display → Leveling Tool. The dedicated angle screen shows:

- Live cant angle (in degrees, updated continuously).
- Live pitch angle (in degrees).
- Combined with LED Cant Mode for hands-free visual feedback.

Use this tool before each session to ensure consistent device alignment. The Cant Angle Adjustment setting (Section 9.4) lets you zero-out any inherent offset in your mounting system.

12.4 LED Cant Feedback

When LED Function is set to Cant Mode:

- **Green LED: The device is level (within the threshold).**
- **Blue LED: Tilted in one direction.**
- **Red LED: Tilted in the opposite direction.**

This provides a quick, glance-free way to verify alignment while settling into your shooting position.

13. Bluetooth & FX Radar App

13.1 Enabling Bluetooth

Go to Settings → Connectivity → Bluetooth and select ON. The device enables its BLE radio and begins advertising its name and services to nearby devices.

13.2 Pairing

1. **Enable Bluetooth on your phone and open the FX Radar App.**
2. **On the app home screen, wait until Add Device starts flashing, then tap it.**
3. **The chronograph displays a 6-digit passkey on the About screen.**
4. **Enter or confirm the passkey on your phone.**
5. **The blue LED indicates an active connection.**

NOTE: For the passkey to be displayed, the device must be in menu mode (not actively measuring). If pairing fails, press Left on the main screen to enter the menu first, then retry pairing from the app.

13.3 What the App Can Do

- **View shots and sessions transferred from the device.**
- **Time synchronization: The app sets the device clock automatically for accurate timestamps.**

- Phone temperature: The app can send an ambient temperature reading to the device, overriding the internal sensor.
- Firmware updates: Over-the-air (OTA) firmware updates through the app.
- Real-time data streaming: Live velocity and statistics on your phone while shooting.
-

13.4 Troubleshooting Bluetooth

- Ensure Bluetooth is ON in the chronograph settings.
- Enter the menu before initiating pairing so the passkey can be displayed.
- Remove old bonds from your phone's Bluetooth settings and re-pair if needed.
- Restart both the device and your phone if the connection is unstable.
- Effective wireless range is approximately 10 meters (30 feet).

14. Placement, Mounting & Alignment

Correct positioning is essential for accurate radar-based velocity measurement. The FX Pocket Chronograph Pro includes two mounting options to suit different shooting setups.

14.1 Why Positioning Matters — Cosine Error

The Doppler radar measures velocity along the radar beam axis. If the chronograph is positioned far from the barrel, the angle between the radar beam and the projectile path increases. This angular offset can cause the measured velocity to be slightly lower than the true velocity.

To minimize this effect, position the chronograph as close to the barrel axis as is practical and safe. In typical setups, placing the device near the barrel and parallel to the projectile path keeps any angular error negligible.

WARNING: Do not sacrifice safety for accuracy. Always keep the device out of the muzzle blast zone and away from ejecting cartridge cases, even if it means a slightly larger offset.

14.2 General Positioning Guidelines

- **Position relative to barrel: Position the chronograph close to the barrel axis while maintaining safe clearance from muzzle blast and ejecting cases. Keeping the device reasonably close to the projectile path helps ensure consistent measurements.**
- **Alignment: The radar aperture (front of the device) must face downrange toward the target, with the display screen facing you. The device should be parallel to the barrel or projectile path.**
- **Behind the muzzle: Position the front edge of the device slightly behind or level with the muzzle. The device can be placed on either side of the firearm.**
- **Clearance: Ensure no obstacles (grass, branches, other equipment) obstruct the radar beam path. The projectile must be able to travel at least 20 meters (20 yards) in front of the chronograph.**
- **Safety: Keep the device out of the muzzle blast zone on high-power firearms. Do not position it where it is directly exposed to ejecting cartridge cases, muzzle blast, or other hazards.**
- **Stability: Secure the device firmly to prevent movement during shooting. When using the gun mount arm, use the Leveling Tool to verify alignment before each session.**

14.3 Mounting with the Tripod

The included compact tripod is the simplest mounting method and is ideal for bench shooting, pistol testing, and any situation where the chronograph can sit on a flat surface beside the shooting position.

1. **Screw the tripod into the 1/4”-20 threaded mount on the bottom of the chronograph.**
2. **Place the tripod on a stable, flat surface such as a shooting bench, table, or hard ground next to the firearm.**
3. **Position the chronograph beside the firearm so the radar aperture faces downrange toward the target and has a clear view of the projectile path.**
4. **Ensure the device is stable and not exposed to muzzle blast, ejecting cartridge cases, or other hazards.**

NOTE: When using the tripod, exact height alignment with the barrel is not required. For best results, position the chronograph beside the firearm with the radar aperture facing downrange and a clear view of the projectile path.

TIP: The tripod also works well for archery: place the chronograph on a surface beside the bow so the arrow passes alongside the radar aperture. Ensure adequate clearance to avoid contact with the arrow or bow limbs.

14.4 Mounting with the Gun Mount Arm

The included gun mount arm attaches the chronograph directly to your rifle or chassis rail, keeping it at a fixed, close distance from the barrel. This is the preferred method for field use, competition, prone shooting, and any situation where a flat surface is unavailable. Because the arm holds the device close to the bore line, it naturally minimizes cosine error.

Compatibility

The gun mount arm is compatible with two industry-standard rail systems:

- **Arca-Swiss: Slide the arm's dovetail clamp onto any Arca-Swiss rail on your rifle chassis, handguard, or tripod head and tighten the locking knob.**
- **Picatinny (MIL-STD-1913): Attach the arm to any Picatinny rail section on your rifle's handguard, scope ring, or chassis.**

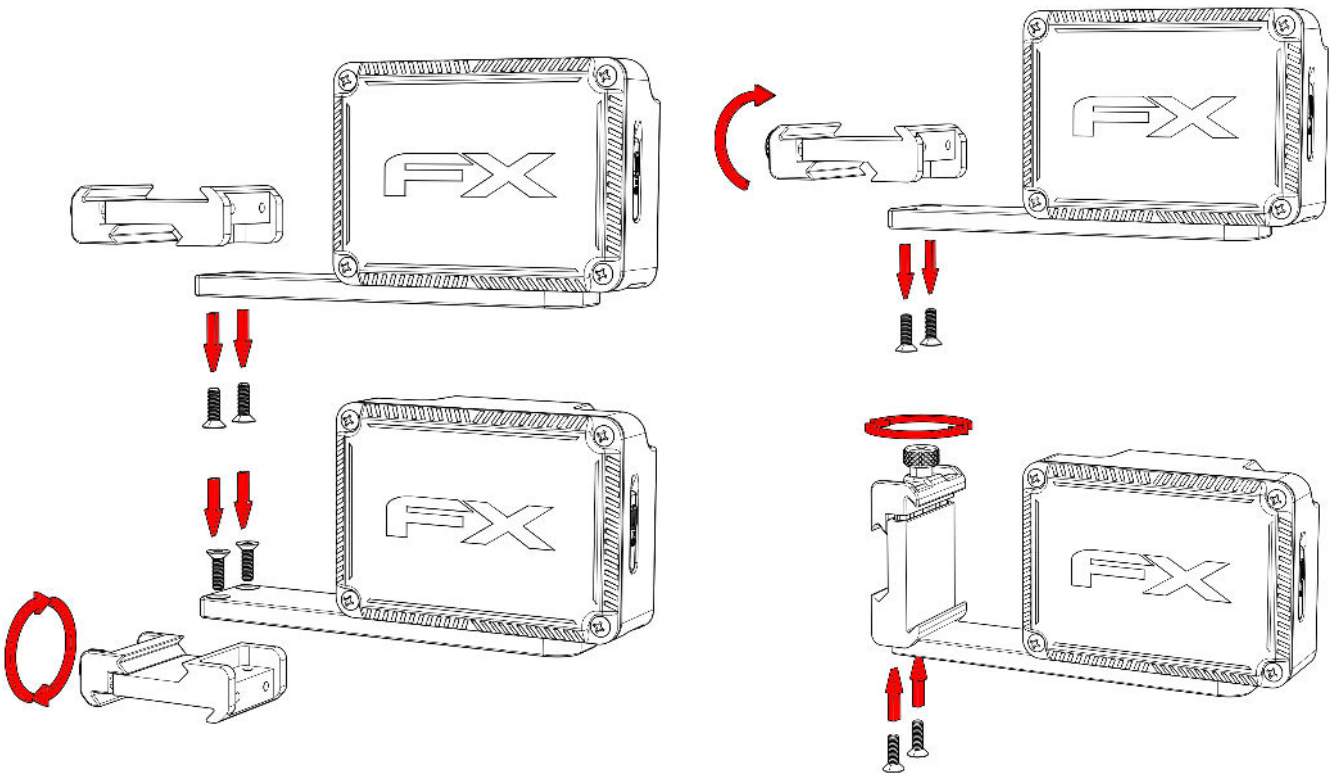

Installation

1. **Attach the base of the gun mount arm to the Arca-Swiss or Picatinny rail on your rifle. Ensure it is securely clamped.**
2. **Screw the chronograph onto the 1/4”-20 threaded stud at the end of the arm.**
3. **Adjust the arm so that the chronograph is as close to the barrel as safely possible, slightly behind the muzzle. The radar aperture must face downrange.**
4. **Tighten all clamps and joints so the chronograph does not shift under recoil.**
5. **Use the Leveling Tool to verify alignment. Adjust the Cant Angle offset (Settings → Sensors → Cant Angle ±) if the arm introduces a slight tilt.**

WARNING: The gun mount arm has been tested with recoil up to 6.5 Creedmoor class cartridges. For cartridges with heavier recoil, use the tripod mounting method instead to avoid potential damage to the arm or device.

WARNING: Ensure the chronograph is positioned far enough behind the muzzle that it is not exposed to muzzle blast, gas, or ejecting brass. Failure to observe this precaution may damage the device.

NOTE: The gun mount arm keeps the chronograph in a consistent position relative to the barrel between sessions, improving the repeatability of BC estimates and velocity measurements.

14.5 Range Selection Guide

Application	Recommended Range	Typical Velocity
Spring/piston airguns	Low Range	400–900 fps
PCP airguns	Low Range	700–1,100 fps
Archery / crossbow	Low Range	200–450 fps
.22 LR rimfire	Low Range	900–1,200 fps
Pistol (subsonic)	Low Range	800–1,100 fps
Pistol (supersonic)	Low Range	1,100–1,500 fps
.223 Rem / 5.56 NATO	High Range	2,800–3,200 fps
.308 Win / 7.62 NATO	High Range	2,600–2,900 fps
6.5 Creedmoor	High Range	2,600–2,800 fps
.338 Lapua Magnum	High Range	2,700–2,900 fps

NOTE: The Low and High ranges overlap somewhat around 1,800 fps. Ammunition in this range may operate in either mode.

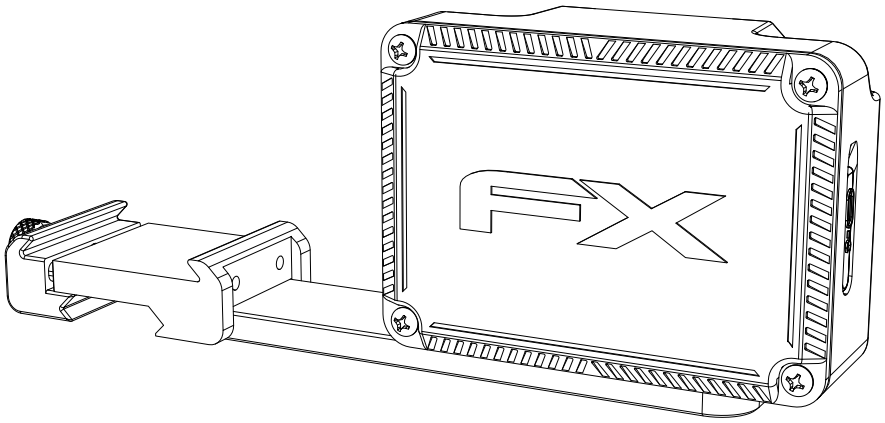

15. Firmware Updates

The firmware can be updated wirelessly through the FX Radar App using Bluetooth:

1. **Ensure the battery is adequately charged (at least 50% recommended).**
2. **On the device, open the About screen.**
3. **Open the FX Radar App and navigate to the More page.**
4. **Select Firmware Update for FX Pocket Chronograph Pro.**
5. **If a firmware update is available, follow the on-screen instructions to upload the firmware to the device.**
6. **After the firmware upload is complete, the device powers off automatically.**
7. **Press the power button to start the update process.**

During the update process, the status LED remains green. The update typically takes 1–2 minutes to complete. Do not power off the device during this time.

After the update is finished, the device starts normally.

NOTE: Firmware updates may not be available in all app versions. The app does not automatically check for updates; updates must be started manually from the More page.

16. Troubleshooting

16.1 Shots Not Detected

Possible Cause	Solution
Chronograph misaligned	Reposition with the radar aperture facing downrange and within 2–6 inches (5-15 cm) of the muzzle.
Wrong velocity range	Verify Low Range for airguns/ subsonic, High Range for firearms/
Trigger sensitivity too low	Increase sensitivity via Settings → Sensors → Trigger Sensitivity.
Movement detection interfering	Try turning Movement OFF in Settings → Sensors → Movement.
Obstruction in radar path	Clear any objects between the muzzle and the chronograph's field of view.

16.2 BC Shows LOW CONF or Does Not Appear

- Verify a drag model is selected (not None).
- Shoot at least 10 consistent shots in the session.
- Use consistent ammunition from the same lot.
- Ensure proper device leveling and stable placement.
- Minimize environmental variables (wind, temperature changes).
- Device is operating in High Range. BC estimation is available only in Low Range.

16.3 Bluetooth Connection Issues

- Confirm Bluetooth is ON in Settings → Connectivity.
- Enter the menu before pairing so the passkey can be displayed on the About screen.
- Remove existing pairings from your phone and re-pair.
- Restart both the device and your phone.
- Ensure you are within 10 meters (30 feet) of the device.

16.4 Passkey Not Displayed

If the device is actively measuring when pairing is requested, the passkey may not be shown. Press Left on the main screen to enter the menu, then retry pairing from the app.

16.5 Temperature Not Displayed

Temperature is shown only when a temperature value has been manually entered in the settings or when a temperature reading has been received from the phone through the FX Radar App.

The internal temperature sensor is not displayed because the reading may be affected by device self-heating or direct sunlight, which can result in inaccurate ambient temperature values.

If temperature is not shown:

- **Verify that Temperature Source is set to Manual or Phone in Settings → Sensors → Temperature Source.**
- **Enter the ambient temperature manually, or connect the device to the FX Radar App to receive temperature from the phone.**

16.6 Unexpected Shutdown

- **Most commonly caused by low battery. Check the battery icon and charge the device.**

16.7 Device Frozen

If the device becomes unresponsive, press and hold the power button until the device turns off. If the device does not respond, release the button and press and hold it again until the device powers off. After the device turns off, press the power button to restart it.

17. Maintenance & Care

17.1 Cleaning

- **Wipe the exterior with a soft, slightly damp cloth.**
- **Use mild soap if needed; avoid harsh chemicals or solvents.**
- **Keep the radar aperture and display clean and free of debris.**
- **Do not submerge the device in water.**
-

17.2 Storage

- **Store in a cool, dry location away from direct sunlight.**
- **Charge the battery to approximately 50% for long-term storage.**
- **Use a protective case when transporting the device.**
- **Do not store in extreme temperatures.**

17.3 General Precautions

- Do not open the enclosure unless you are qualified and authorized to do so.
- Avoid exposing the device to excessive moisture, dust, or strong impacts.
- Do not disassemble the radar module.
- Keep the device away from strong magnetic fields.

18. Glossary

BC (Ballistic Coefficient): A measure of how efficiently a projectile overcomes air resistance. Higher BC means less drag and better long-range performance.

BLE (Bluetooth Low Energy): A power-efficient wireless communication standard used for connecting to the FX Radar App.

Cant: Side-to-side tilt of a firearm or device. Even small cant angles affect bullet impact at long range.

Density Altitude: The effective altitude adjusted for atmospheric conditions (temperature, pressure, humidity). Affects projectile ballistics.

Doppler Radar: Radar that measures velocity by detecting the frequency shift of reflected electromagnetic waves.

ES (Extreme Spread): The difference between the highest and lowest velocities in a session. Lower ES indicates more consistent ammunition.

Ft-lb (Foot-Pound): A common unit of muzzle energy in shooting, calculated from velocity and bullet weight.

Joule (J): The SI unit of energy. 1 Joule = 0.7376 ft-lbs.

OTA (Over-The-Air): **Wireless firmware update delivered through the FX Radar App without a physical cable connection.**

Pitch: **Front-to-back tilt (elevation angle) of the device.**

Power Factor: **(Velocity × Bullet Weight) / 1000. Used in IPSC/USPSA competitions to classify ammunition.**

PRS (Precision Rifle Series): **A competitive shooting discipline that uses timed stages with specific shot counts and time limits.**

SD (Standard Deviation): **A statistical measure of velocity consistency. Lower SD indicates more uniform ammunition performance.**

19. Quick Reference Card

Button Shortcuts

Action	How To
Power on	Long press Right button
Power off	Long press Right button
Open menu	Short press Left on main measuring screen
New session	Short press Right on main measuring screen
Navigate menu	Right = scroll next; Left = select
Return to previous menu	Long press Left from any menu
Start timer	Right button in READY/PREP state
Pause/Resume timer	Right button in ACTIVE state
Stop timer	Left button during timer operation

Default Settings

Setting	Default Value
Velocity Unit	FPS
Secondary Unit	None
Temperature Unit	Celsius
Drag Model	None
Screen Mode	Detailed
LED Function	Stability
Bluetooth	Enabled
Movement Detection	Enabled
Temperature Source	Phone
Trigger Sensitivity	Medium

Menu Map

Main Menu: **New Session | Saved Sessions | PRS Mode | Settings | About**

Settings: **Units | Display | Connectivity | Sensors | Logs**

Units: **Velocity Units | Secondary Units | Temperature Units | Drag Model**

Display: **Screen Mode | LED Function | Leveling Tool**

Sensors: **Movement | Temperature Source | Cant Adjustment | Trigger Sensitivity**

PRS Mode: **Start Timer | Timer Config | Back**

Timer Config: **Start Mode | Prep Time | Stage Time**

20. FCC Statement

FCC Caution:

Any changes or modifications not expressly approved by the party responsible for compliance could void the user's authority to operate this equipment.

FCC Compliance Statement:

This device complies with Part 15 of the FCC Rules. Operation is subject to the following two conditions:

(1) This device may not cause harmful interference, and

(2) this device must accept any interference received, including interference that may cause undesired operation.

Radiation Exposure Statement:

This equipment complies with FCC radiation exposure limits set forth for an uncontrolled environment. This equipment should be installed and operated with minimum distance 20cm between the radiator and your body.

This equipment has been tested and found to comply with the limits for a Class B digital device, pursuant to part 15 of the FCC Rules. These limits are designed to provide reasonable protection against harmful interference in a residential installation. This equipment generates, uses and can radiate radio frequency energy and, if not installed and used in accordance with the instructions, may cause harmful interference to radio communications. However, there is no guarantee that interference will not occur in a particular installation. If this equipment does cause harmful interference to radio or television reception, which can be determined by turning the equipment off and on, the user is encouraged to try to correct the interference by one or more of the following measures:

—Reorient or relocate the receiving antenna.

—Increase the separation between the equipment and receiver.

—Connect the equipment into an outlet on a circuit different from that to which the receiver is connected.

—Consult the dealer or an experienced radio/TV technician for help.

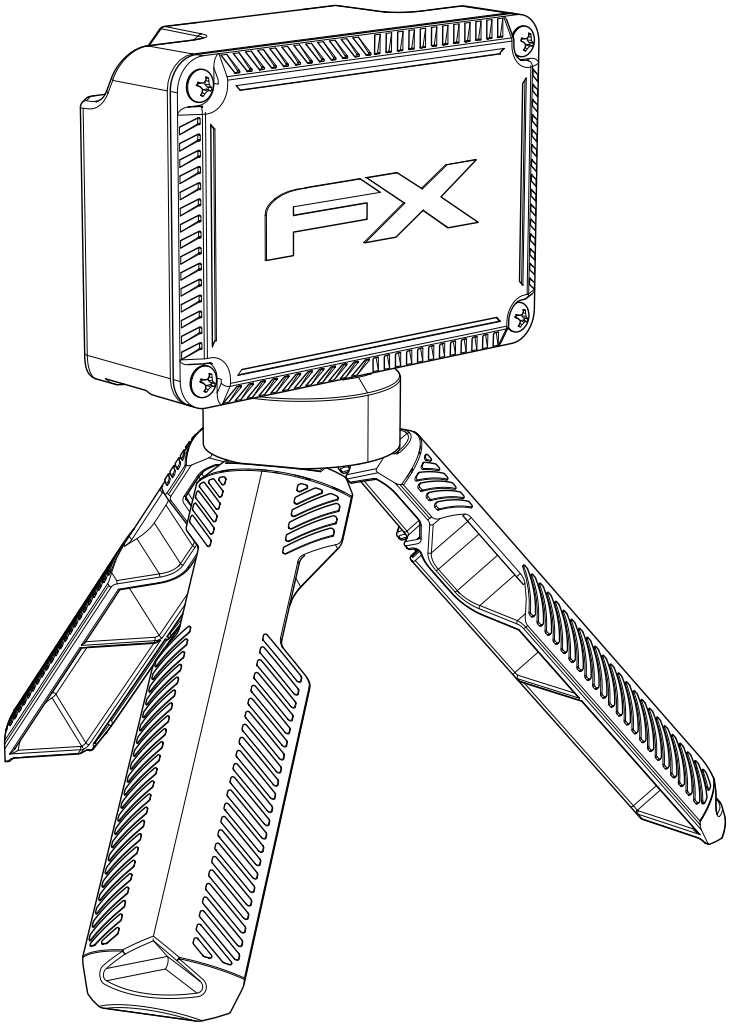

© 2025 FX Airguns AB. All rights reserved.

FX Pocket Chronograph Pro is a trademark of FX Airguns AB.

For the latest updates, support, and resources, visit www.fxairguns.com